" ; . 8 = p S O " t " G ; = " : Z ~ 3 } m 4 9 " 3-2S \ H G 8 V k 1 > = 4 * J g 4 ? G 8 R " ' ^ z ^ S K * 4 E " ; . P Q K 4 D n ~ P s t ! (m 4 # 8 \ ] E) ~ " ; T # K 4 E - F G (m G * n S

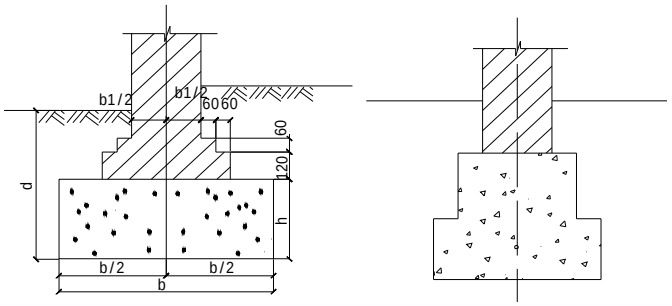

"3-4 R ! . "3-5 s t ! .

' Q ! . 8 = ; R . : . c 9 c ; ' Q n = > + P .] N } m S \ c S L n F1,2,4:1,3 ,65 / 4 S t l e _ A s " R 4 w x + l 3 4 + m - + 200㎜ 4 4] j W 150㎜ 4 + W n " M z R 4 E \ Y ~ ^ \ . 4 9 "3-3S ' Q ! . 6 =] r ~ J # 1 R 4 1 1 A X , g G [m : [m c 1 G w = 2 3 " # K S

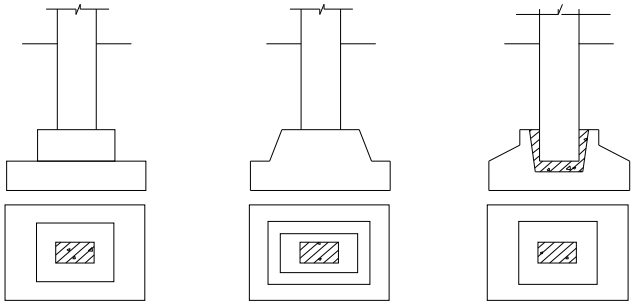

1 Z l . c l . 3 l .

"3-6 0 1 j t .

R ! . 8 = ; R " W) ! s Q = > + P .] N } m S \ c S L 6 =3,792,8G L 8 5 / 4 S t l e _ A s x 4 a m] j S + m - + 220 : 250㎜ 4] j W 150㎜ 4 / (n h 4 9 "3-4S R " K < m J . / R ! L 8 " s " w x G 7 8 4 + m] j P 0 R 4 F h " > R ! Z 4 K " \ E N z S] j R G R ! q { E N z [e ! 1.55t/㎥ 4 e 2 W ! 1.50t/㎥ 4 W ! 1.40t/㎥ S

s t ! " " ; s t ! . G z . \ ]) M x >) H H] ; . 4 { | 4 B n o , ^ 9 X] 1 1 A X c 1 % 4 } % & c = s t ! . 4 9 "3-5S s t ! . A z = _ ^ 4 v * c M 4 B . c S , ^ % 4 } P Q m " ; s t ! . S " ; s t ! . 8 E 1 R s t ! T # K 4 2 l ;] . c S 30% G " ; 4 c + B A z = _ S \ ] \ R " 2 _ . / , Y F 4 3 = L ~ H I S

2. s t ! U s .

4 1 0 1 s t ! . G $ [6 l m i 1 l 9 f c l _ S / 0 1 G . n l m 3 l . 4 9 "3-6S

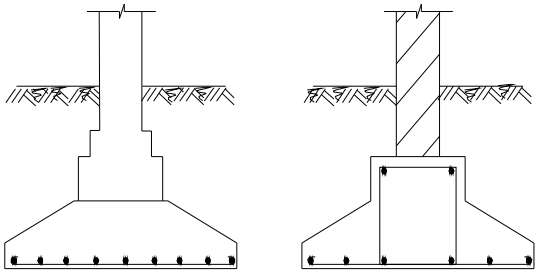

(a) # 4 e (b) $ 4 e