The Changes in the following pages are those that are in the Second Printing of the Belt Book which corrects the typos and errors discovered after the distribution of the first printing. Some pages have small typos. Some pages have corrected equations. Some few pages have rewritten paragraphs for better clarification. For ease of review for owners of the first printing, we have annotated the changes on each page. You are welcome to print out the pages that interest you and insert them into your hard copy of the First Printing.

BELT CONVEYORS for BULK MATERIALS

Prepared by the Engineering Conference of the

CONVEYOR EQUIPMENT MANUFACTURERS ASSOCIATION

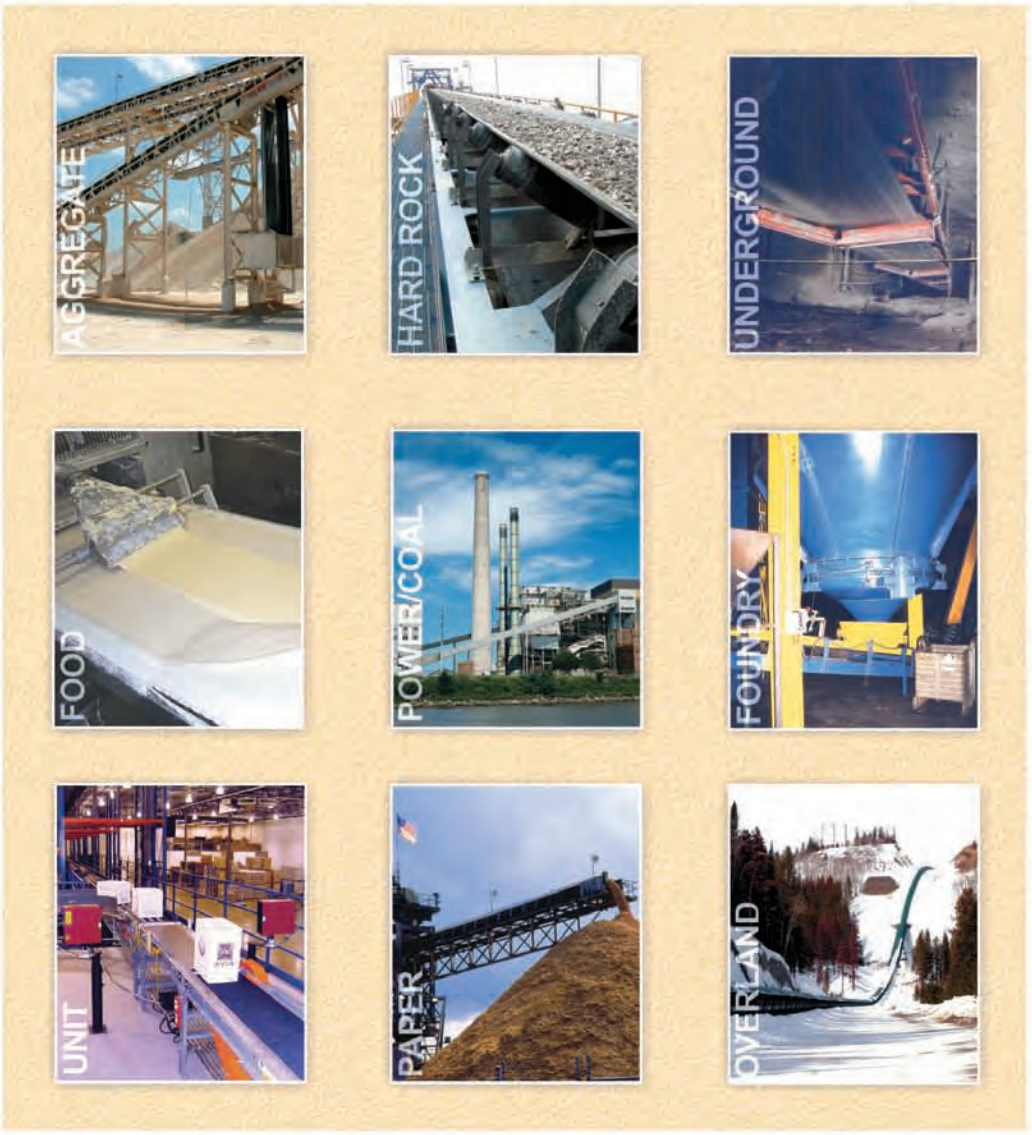

SIXTH EDITION
2nd Printing

Belt Conveyor Loading and Discharging Arrangements



Figure 2.12
Movable inclined telescoping conveyor forming stockpile



Figure 2.13
Rock crushing and screening plant utilizes several types of basic conveyor profiles

It is recommended that the feed conveyor not be elevated more than the minimum height necessary for a satisfactory transfer. This translates into less power being needed to lift the material on the feed belt. Consequently any additional power absorbed due to excessive transfer height could be dissipated as impact, abrasion, degradation, noise and dust generation, if careful design of the entire system is not carried out. The amount of belt separation required is also dependent on the horizontal offset of the conveyors, when the orientation is not in-line. The further the horizontal distance between discharge pulley and load zone, the greater the vertical separation needs to be.

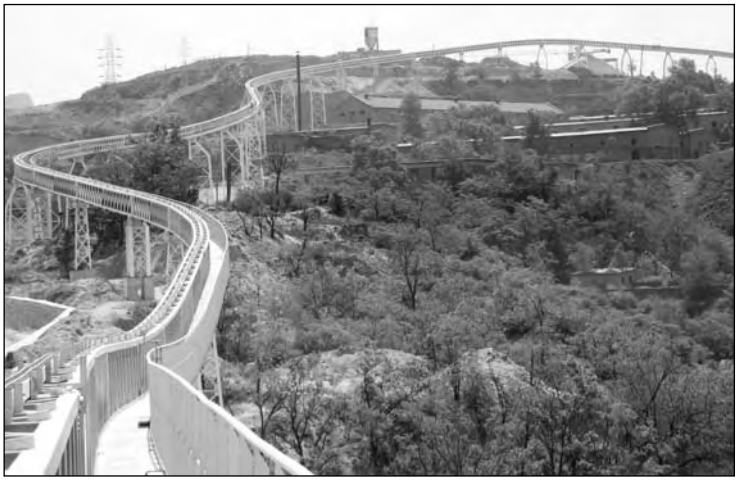

Figure 2.14
Pipe conveyor over difficult terrain

Cross-over & Cross-under

Definition

A device used to allow personnel to cross conveyors a designated and approved locations.

Local codes and site specific rule may govern the style, location and use of cross-overs and cross-unders.

CEMA Recommendation

- Cross-overs, when not specified by code, shall be CEMA type 3 or type 4 crossovers in accordance with CEMA Best Safety Practices Recommendation 001-2004 or most current version.

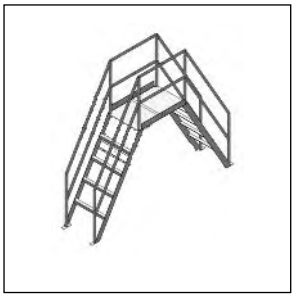

Figure 2.32
CEMA Type 3 crossover



Figure 2.33
CEMA Type 4 crossover

Effect of Inclines and Declines *Cont.*

Critical relationships between belt velocity, material conveyed, and conveyor setup must be maintained to avoid spillage and slip-back of the material on inclined or declined belts. Simplified relationships for the maximum belt velocities attainable before material slip or spillage occurs on inclined or declined belts are given by:

Equation 3.7
Equation For Maximum Belt Speed Before Material Slippage Occurs

$$V_{slip\text{-}max} = 60 \times \sqrt{\frac{S_i}{2\pi^2 \times Y_s}\left(g\left(\cos(\theta_{belt}) - \frac{1}{\mu_e}\sin(\theta_{belt})\right) + \frac{\sigma_0}{\rho \times h}\right)} \quad \text{(fpm)}$$

$\sigma_0 \times g$

Equation 3.8
Equation for Maximum Belt Speed Before Material Spillage Occurs

$$V_{spill\text{-}max} = 60 \times \sqrt{\frac{S_i}{2\pi^2 \times Y_s}\left(g \times \cos(\theta_{belt}) + \frac{\sigma_0}{\rho \times h}\right)} \quad \text{(fpm)}$$

$\sigma_0 \times g$

Where:

S_i (ft) = Idler spacing (Chapter5)

$Y_s = \frac{\Delta Y_s}{S_i}$ Dimensionless ratio for belt sag between idlers

g (ft/s^2) = Acceleration due to gravity $32.2 ft/s^2$

θ_{belt} (radians) $= \theta_{belt}$ (deg) $\frac{\pi}{180}$ radians required for Equations 3.7 & 3.8

ρ (lbm/ft^3) = Bulk density of the bulk material

μ_e = Equivalent friction between bulk material and conveyor belt

σ_0 (lbf/ft^2) = Adhesive stress between bulk material and conveyor belt

h (ft) $= \left[b_{wmc} \times \sin(\beta) + \frac{(b_c + 2 \times b_{wmc} \times \cos(\beta)) \times \tan(\Phi_s)}{6}\right]\left[\frac{1}{12}\right]$

b_{wmc} (in) = .2595×BW - 1.025 Length of belt on wing roller in contact with the material

b_c (in) = .371×BW + .25 Length of belt on center roller in contact with the material

BW (in) = Belt width

β (deg) = Idler wing roll inclination

Φ_s (deg) = Surcharge angle of the bulk material

Effect of Inclines and Declines *Cont.*

Note that these relationships hold for points well beyond the loading zone. To estimate critical belt velocities in and immediately following the load zone, values for the above parameters must be determined in the load zone. For example, values for the load zone belt angle, idler spacing and belt sag in the load zone must be used. Material properties such as loose material density, material-belt interface friction, and angle of repose rather than angle of surcharge must be used as well. Other considerations in the load zone must also be considered to avoid spillage, such as impact effects, belt support, and the presence of sealing systems. In addition, some materials exhibit fluid-like behavior and have a tendency to flow at much lower values of friction then one would expect at the material/belt interface. As always, material and interface properties are greatly affected by moisture content and particle size.

Graph 3.9 shows the effect of conveyor slope on the maximum attainable belt speeds before slip and spillage occur. Note that the sag ratio depends on the material load, idler spacing, and type and thickness of the conveyor belt used.

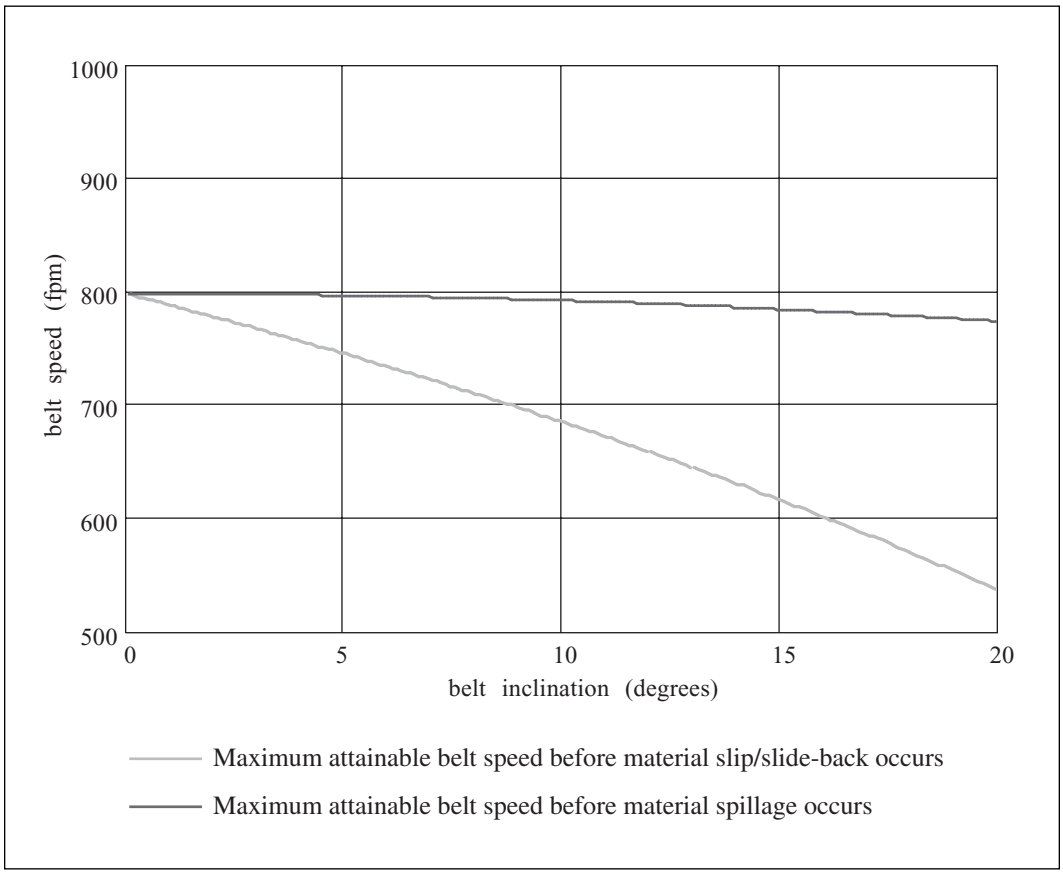

Figure 3.9

The values used in the example represent a specific Powder River Basin coal sample and a specific belt and do not represent a typical value for design purposes. The values S_i, Y_s, θ_{belt}, Φ_s and β must relate to the conveyor design parameters. The values ρ, and σ_o for the bulk solid and the value μ_e for the belt and bulk material interface must be obtained through testing for each bulk material and belt condition.

Belt Speeds

Suitable belt conveyor speed depends largely upon the characteristics of the material to be conveyed along with belt width, capacity, belt tensions and loading/unloading equipment. Each application must be evaluated on these technical issues as well as on capital cost, operating conditions and maintenance considerations. General recommendations for maximum speeds of belt conveyors are shown in Table 4.2.

Table 4.2
Recommended maximum belt speeds

Material Being Conveyed	Belt Speeds (fpm)	Belt Width (in)
Grain or other free flowing, nonabrasive material	400 600 800 1000 1200	18 24-30 36-42 48-96 108-120
Coal, damp clay, soft ores, overburden and earth, fine crushed stone	600 800 1000 1200 1400	18 24-36 42-60 72-96 108-120
Heavy , hard, sharp edged ore, coarse crushed stone	400 600 800 1000 1200	18 24-36 42-60 72-96 108-120
Foundry sand, prepared or damp; shake-out sand with small cores, with or without small castings (not hot enough to harm belting)	350	Any Width
Prepared foundry sand and similar damp (or dry abrasive) materials discharged from belt by rubber edged plows	200	Any Width
Nonabrasive materials discharged from belt by means of plows	200 Except for wood pulp where 300 to 400 is preferable	Any Width
Feeder belts, flat or troughed, for feeding fine , nonabrasive, or mildly abrasive materials from hoppers and bins	50 to 100	Any Width
Coal (bituminous, sub-bituminous), PRB coal, lignite, petroleum coke, gob, culm and silt.	500 to 700 for belt conveyors 380 to 500 for silo feed conveyors and tripper belt conveyors	Any Width
Power Generating Plant applications	500 for belt conveyors 380 for silo feed conveyors and tripper belt conveyors	Any Width

COAL FIRED POWER GENERATING PLANTS

Lower belt speeds and de-rated capacities are often used for handling coal in coal fired power generating plants and handling other bulk materials subject to degradation and the hazards associated with spillage, leakage and dust generation. It is common practice not to load coal conveyors to their capacity in order to accommodate surge loads and to reduce spillage and leakage due to mistracking. A capacity design factor, DF, of 1.20 (83% of theoretical maximum capacity) is often used in handling coal in coal fired power plants. However, there are numerous factors to consider, including the properties of the bulk material, the conveyor engineer's experience in selecting an appropriate belt speed and the sizing of other components which may affect the overall performance and cost of a system.

Belt Conveyor Capacities

Conveyors are typically not designed to be loaded to their maximum capacity in order to accommodate surge loads and to reduce spillage and leakage due to mistracking. Typical capacity design factors, DF, range from 1.00 to 1.25 (100% to 80% of theoretical maximum capacity). However the conveyor horsepower should always be calculated on 100% of theoretical capacity to accommodate starting under surge or head loads.

For a given speed, belt conveyor capacities increase as the belt width increases. Also, the capacity of a belt conveyor depends on the surcharge angle and on the inclination of the side rolls of three-roll troughing idlers. The nominal cross section of the material on a belt is measured in a plane normal to the belt. On an inclined or declined conveyor, the material tends to conform to its surcharge angle as measured in a vertical plane. This decreases the area, Asc, as the cosine of the angle of conveyor slope. See Figure 4.9. However, in most cases, the actual loss of capacity is very small. Assuming a uniform feed to the conveyor, the cross-sectional area of the load on the conveyor belt is the determinant of the belt conveyor capacity.

CEMA Recommendation

1. Select the belt width and speed based on a capacity design factor of 80% the theoretical maximum tons per hour (reduction of capacity). This allows for surge loading and reduces spillage due to belt mistracking based on the material conveyed, the performance requirements and the experience of the conveyor designer.
2. Design conventional loading chute cross sections based on the loose material profile which is defined by the angle of repose, rather than the angle of surcharge, and the unconfined bulk density. This reduces the possibility of choking the flow as the material loads on the belt and begins to settle into a profile determined by the surcharge angle and bulk density.

In this manual, the cross-sectional area is based upon the following two conditions. First, the material load on the troughed belt does not extend to the belt edges. The distance from the edges of the material load to the edges of the belt is set at "standard edge distance," which is defined as 0.055BW + 0.9 inch, where BW is the width of the belt in inches.

Table 4.3 *Standard edge distance*

Belt Width (in)	18	24	30	36	42	48	54	60	72	84	96	108	120
Standard Edge Distance (in)	1.89	2.22	2.55	2.88	3.21	3.54	3.87	4.2	4.86	5.52	6.18	6.84	7.5

Throughout this manual, standard edge distance is presumed to be in effect unless otherwise specified. Second, the top of the load of the material is the arc of a circle tangent, at the edges of the load, to the surcharge angle, unless otherwise specified.

Belt Conveyor Capacity Tables and Their Use

Troughed and flat belt conveyor capacities are detailed in Tables 4.4 through 4.7. These tables are set up for 20 degrees, 35 degrees, and 45 degrees troughing idler shapes and flat belts; for various degrees of surcharge angles which correspond to the slumping characteristics of the materials to be conveyed; and for belt speeds of 100 fpm. To make the best use of these tables, the following eight steps should be taken:

1. Referring to Tables 3.3 and 3.4 or CEMA Standard 550 determine the surcharge angle of the material. The surcharge angle, on the average, will be 5 degrees to 15 degrees less than the angle of repose.
2. Refer to Table 3.5 or CEMA Standard 550 to determine the density of the material in pounds per cubic foot (lbf/ft^3).
3. Choose the idler shape suited to the material and to the conveying problem. Refer to Chapter 5.
4. Refer to Table 4.2, "Recommended Maximum Belt Speeds." Select a suitable conveyor belt speed.
5. Convert the desired tonnage per hour (tph) to be conveyed to the equivalent in cubic feet per hour (ft^3/hr). DF=Capacity Design Factor is defined on page 55 to over rate the conveyor. For example, DF=1.2 is suggested for coal fired power plants.

$$ft^3/hr = \frac{Q \times 2000 \times DF}{\gamma}$$

6. Convert the desired capacity in cubic feet per hour to the equivalent capacity at a belt speed of 100 fpm.

$$Q100 = ft^3/hr \times \frac{100\ (fpm)}{\text{actual belt speed (fpm)}}$$

7. Using the equivalent capacity so found, refer to Tables 4.4 through 4.7 and find the appropriate belt width.
8. If the material is lumpy, check the selected belt width against the curves in Figure 4.1. The lump size may determine the belt width, in which case the selected belt speed may require revision.
9. Convert the desired capacity in cubic feet per hour to the equivalent capacity at a belt speed of 100 fpm.
10. Using the equivalent capacity so found, refer to Tables 4.4 through 4.7 and find the appropriate belt width.
11. If the material is lumpy, check the selected belt width against the curves in Figure 4.1. The lump size may determine the belt width, in which case the selected belt speed may require revision.

Tables 4-4 through 4-7 are based on 100% capacity (Design Factor of 1.0) and zero degrees conveyor slope.

Table 4.4

20 degree troughed belt, three equal rolls, standard edge distance

Belt Width (in)	A_{SC} Cross Sectional Area (ft^2) Surcharge Angle (deg)							Q_{100} = Capacity (ft^3/hr) at 100 fpm Surcharge Angle (deg)						
	0	5	10	15	20	25	30	0	5	10	15	20	25	30
18	0.090	0.109	0.128	0.148	0.168	0.188	0.209	538	653	769	886	1,006	1,128	1,255
24	0.174	0.210	0.246	0.283	0.321	0.359	0.399	1,041	1,259	1,477	1,699	1,925	2,156	2,394
30	0.285	0.343	0.402	0.462	0.523	0.585	0.650	1,708	2,060	2,414	2,773	3,138	3,512	3,898
36	0.423	0.510	0.597	0.685	0.774	0.866	0.961	2,539	3,058	3,579	4,107	4,645	5,197	5,765
42	0.589	0.708	0.829	0.951	1.075	1.202	1.333	3,533	4,251	4,973	5,703	6,447	7,210	7,997
48	0.782	0.940	1.099	1.260	1.424	1.592	1.765	4,691	5,640	6,594	7,560	8,544	9,553	10,593
54	1.002	1.204	1.407	1.613	1.823	2.037	2.259	6,013	7,225	8,444	9,678	10,935	12,224	13,553
60	1.250	1.501	1.754	2.010	2.270	2.537	2.813	7,499	9,006	10,523	12,058	13,621	15,224	16,877
72	1.827	2.193	2.561	2.933	3.313	3.702	4.103	10,961	13,156	15,364	17,600	19,876	22,210	24,617
84	2.513	3.015	3.520	4.031	4.552	5.085	5.636	15,078	18,089	21,119	24,186	27,310	30,511	33,814
96	3.099	3.717	4.339	4.969	5.610	6.267	6.945	18,596	22,304	26,035	29,811	33,658	37,601	41,667
108	4.213	5.051	5.895	6.749	7.618	8.510	9.429	25,277	30,307	35,369	40,492	45,711	51,060	56,576
120	5.226	6.265	7.311	8.369	9.446	10.551	11.690	31,359	37,592	43,863	50,212	56,679	63,306	70,142

Belt Load Cross Section Areas

TROUGHED BELT LOAD AREA

The belt theoretical load area tables are calculated using the standard edge distance, the geometry of the standard idler and a semicircular top surface cross section whose outer edge is tangent to the angle of surcharge. The equivalent center distance of the belt in contact with material is assumed to equal .371BW + .25 (in).

Referring to Figure 4.8 there are at least 2 cross section conditions that must be considered in the selection of a belt width and speed. During loading with conventional chutes there is often a turbulent transition to a profile confined by the skirtboards and finally the steady state unconfined condition on the belt governed by the surcharge angle.

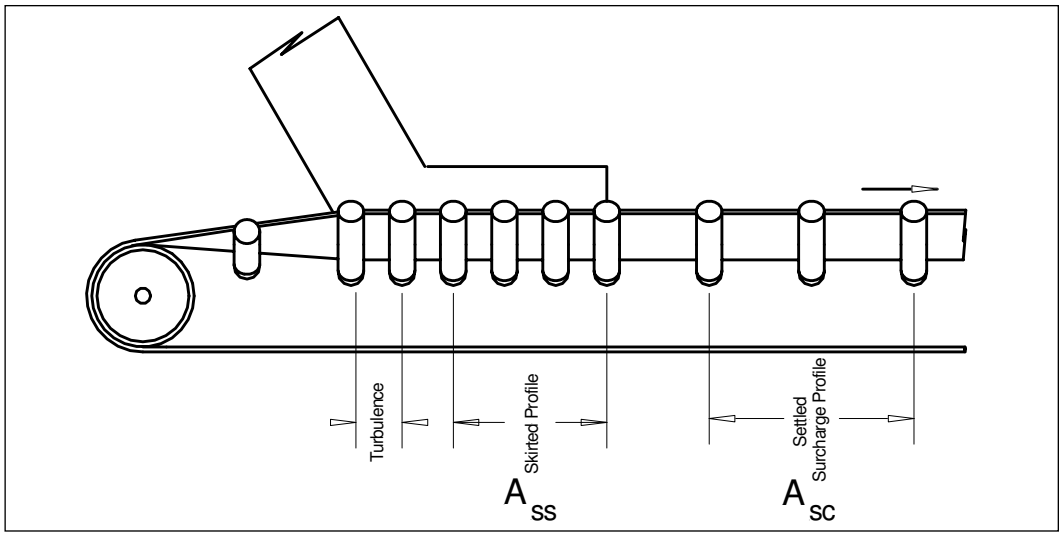

Figure 4.8
Cross sectional area profiles

Referring to Figure 4.9, the area of load cross section can be considered as two geometrical shapes. One is the trapezoidal area, the other is the circular segment area which is termed the surcharge area. The sum of these two areas equals A_{sc}, which is the total cross-sectional area for the standard profile based on the surcharge angle and standard edge distance.

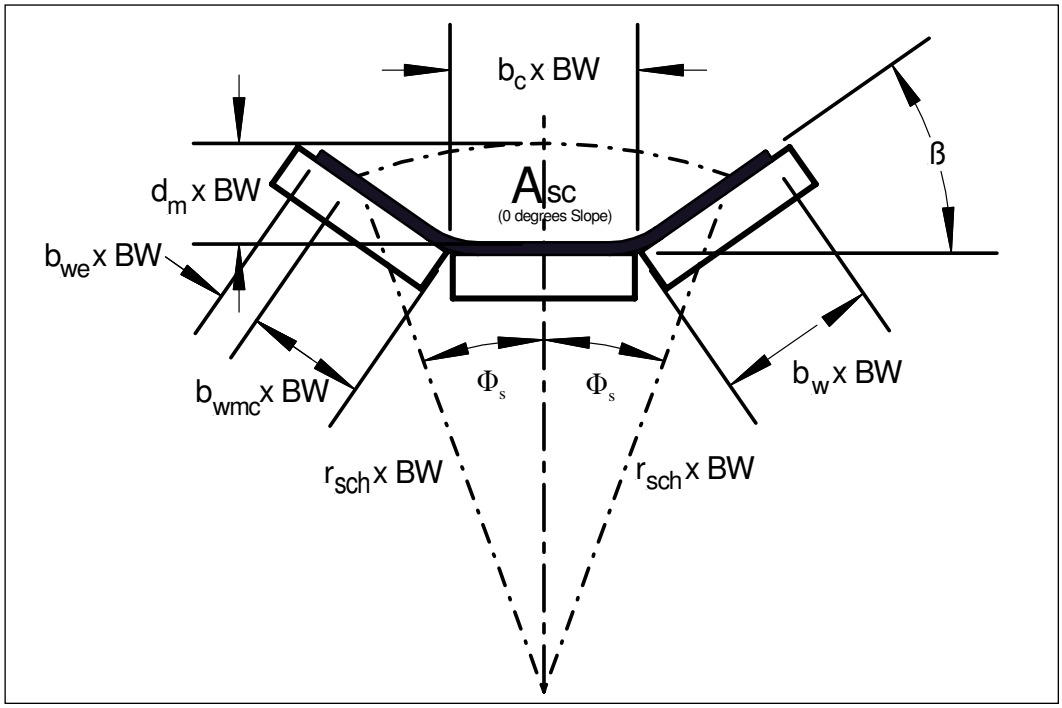

Figure 4.9
Area of standard surcharge load cross section, A_{sc}

Belt Load Cross Section Areas *Cont.*

Tables 4.4 – 4.7 were generated using the equations: (derivations not shown)

Should be -

Area of the Trapezoid

$$A_b = \left[0.371 \times BW + 0.25 + \left(0.2595 \times BW + 1.025\right) \times \cos\beta\right] \times \left[\left(0.2595 \times BW - 1.025\right) \times \sin\beta\right]$$

Area of Circular Segment

$$A_s = \left(\frac{0.1855 \times BW + 0.125 + \left(0.2595 \times BW - 1.025\right) \times \cos(\beta)}{\sin(\Phi_s)}\right)^2 \times \left(\frac{\pi \times \Phi_s}{180} - \frac{\sin(2\Phi_s)}{2}\right)$$

Total area $A_{sc}\left(ft^2\right) = \frac{A_b + A_s}{144}$

Based on an analysis of the three-equal-roll troughing idlers of eight manufacturers, the length of the flat surface of the center roll averages 0.371 BW +.25, where BW is the belt width in inches. The 5th edition capacity calculation method is still valid. The calculation method presented in the 6th edition analysis of cross sectional areas produces similar results and is more suitable for numerical analysis. The method is valid for flat and troughed belts. The cross sectional area of the belt radius at the juncture of the center rolls and wing rolls of troughed idler sets is ignored. Calculation of the cross sectional area is based on the geometry of the belt's upper surface.

Two situations are defined below. In the first case the cross sectional area, A, results from the conveyor specifications and the resulting edge clearance is calculated. In the second, the area, A_{sc}, and the depth, d_m, are calculated from the edge clearance. All b and r variables are dimensionless ratios of BW defined by the following:

$A\ (ft^2)$ = Total material cross sectional area based on design criteria = $\frac{Q \times 2000}{V \times \gamma \times 60}$

$A_{ss}\ (ft^2)$ = Total cross sectional area skirted profile

$A_{sc}\ (ft^2)$ = Cross section area based on the surcharge angle with circular top surface and a known edge distance

b_c = Ratio of upper surface of belt above center roll = $\frac{.371 \times BW + 0.25}{BW}$

b_w = Ratio of upper surface of belt above wing roll = $b_{we} + b_{wmc} = \frac{1 - b_c}{2}$

b_{we} = Ratio of upper surface belt edge above wing roll (.055 x BW +.9)/BW

b_{wmc} = Ratio of surface belt with material contact on it above wing roll

d_m (in) = Maximum depth of material profile,

β (rad) = Troughing angle (degrees when used with a trig function otherwise radians)

Φ_s (rad) = Surcharge angle (degrees when used with a trig function otherwise radians)

Φ_r (rad) = Angle of repose (degrees when used with a trig function otherwise radians)

Q (tph) = Design capacity in tons per hour

$Q_{100}(ft^3/hr)$ = Equivalent Capacity at 100 fpm

V (fpm) = Belt speed

$\gamma\ (lbf/ft^3)$ = Bulk density of the material

r_{sch} = Ratio of effective radius of the top surface of the material based on surcharge angle compared to BW, belt width.

$$= \frac{\frac{b_c}{2}}{\sin(\Phi_s)} + \frac{\cos(\beta)\, b_{wmc}}{\sin(\Phi_s)}$$

Continued on following page

Belt Load Cross Section Areas *Cont.*

SF = Capacity Design Factor for reducing the capacity for design purposes.

r_r = Ratio of effective radius of the top surface of the material based on angle of repose compared to BW, belt width.

$$= \frac{\frac{b_c}{2}}{\sin(\Phi_r)} + \frac{\cos(\beta)\, b_{wmc}}{\sin(\Phi_r)}$$

CALCULATION OF THE TOTAL MATERIAL CROSS SECTIONAL AREA, A_{sc}

a, b, c and Φ_c are calculation variables:

This A_{sc} equation is meant to be used to calculate A_{sc} for particular center roll lengths and belt edge distances including the CEMA standard belt edge of be = .055BW +0.9 (inches).

$$A_{sc} = \frac{2 \times BW^2}{144} \times \left[r_{sch}^2 \times \left(\frac{\Phi_s}{2} - \frac{\sin(\Phi_s) \times \cos(\Phi_s)}{2} \right) + \left[\frac{b_c}{2} \times (b_{wmc}) \times \sin(\beta) \right] + b_{wmc}^2 \times \frac{\sin(\beta) \times \cos(\beta)}{2} \right]$$

CALCULATION OF EDGE DISTANCE WITH A MAXIMUM MATERIAL DEPTH ON BELT

The unloaded edge distance b_c x BW results when a particular cross section A is known from Q, V and the bulk density and the center roll length is known.

$$b_{we} = b_w - b_{wmc}$$

$$b_{wmc} = \frac{-b + (b^2 - 4 \text{ x } a \text{ x } c)^{.5}}{2 \text{ x } a}$$

Where a, b and c are calculation variables.

$$a = \frac{\cos(\beta)^2}{\sin(\Phi_s)^2} \times \left(\Phi_s - \sin(\Phi_s) \times \cos(\Phi_s) \right) + \cos(\beta) \times \sin(\beta)$$

$$b = b_c \times \sin(\beta) + b_c \times \frac{\cos(\beta)}{\sin(\Phi_s)^2} \times \left(\Phi_s - \sin(\Phi_s) \times \cos(\Phi_s) \right)$$

$$c = -\frac{144 \times A}{BW^2} + \frac{1}{4} \times \frac{b_c^2}{\sin(\Phi_s)^2} \times \left(\Phi_s - \sin(\Phi_s) \times \cos(\Phi_s) \right)$$

MAXIMUM MATERIAL DEPTH ON BELT

Assuming the circular cross section defined by the surcharge angle and the standard or calculated edge distance, the maximum depth on the belt, $d_m = b_d$ x BW, can be calculated as follows.

b_d is a dimensionless ratio of the material depth to the belt width.

d_m (in) = the maximum material depth

$$b_d = b_{wmc} \sin(\beta) + \left[\frac{\frac{b_c}{2}}{\sin(\Phi_s)} + \frac{\cos(\beta)\, b_{wmc}}{\sin(\Phi_s)} \right] (1 - \cos(\Phi_s))$$

Belt Load Cross Section Areas *Cont.*

MATERIAL CROSS SECTION AREA BETWEEN SKIRTBOARDS

The material constrained by skirtboards is analyzed by calculating the trapezoidal and surcharge areas per A_{sc} above and adding a rectangular area contacting the skirting. The CEMA recommended skirtboard width to belt width ratio is 0.67 BW.

Table 4.10
Standard skirtboard widths

Belt Width (in)	18	24	30	36	42	48	54	60	72	84	96	108	120
Standard Skirt Width (in)	12	16	20	24	28	32	36	40	48	56	64	72	80

$b_s = \frac{W_s}{BW}$ Check that skirtboard width, W_s, is greater than center roll length, b_c x BW.

If $b_s > b_c$ recalculate A_{sc} as A_{ss} using $b_{wmc} = \frac{b_s - b_c}{2 \times \cos(\beta)}$

Rectangular area is:

$A_s = A - A_{sc}$

$d_{ms} = \frac{A_s \times 144}{W_s}$ (inches)

With $A_s = \frac{d_{ms} \times W_s}{144}$ the total area for a particular depth can be calculated from $A = A_s + A_{ss}$.

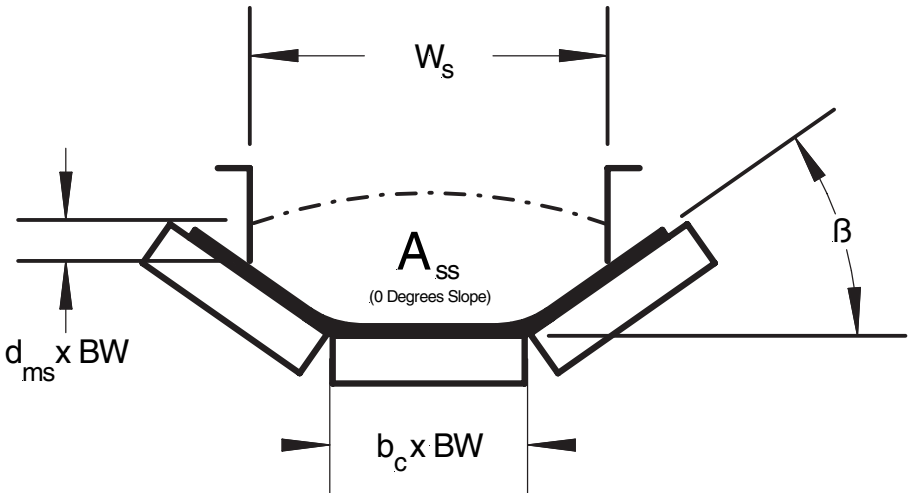

Figure 4.11
Skirted profile cross sectional area, A_{SS}

Preface to Selection Procedure, Figures and Tables *Cont.*

STEP NO. 2 RETURN IDLER SERIES SELECTION

Calculated Idler Load (lbf) = CIL_R= (WB x SI) + IML

Use CIL_R and select proper series of idler from Tables 5.30 through 5.36. CIL_R should be equal to or less than return idler rating.

STEP NO. 3 K2 = EFFECT OF LOAD ON PREDICTED BEARING L_{10} LIFE

When Calculated Idler Load (CIL) is less than the CEMA load rating of a series idler selected, the bearing L_{10} life will increase.

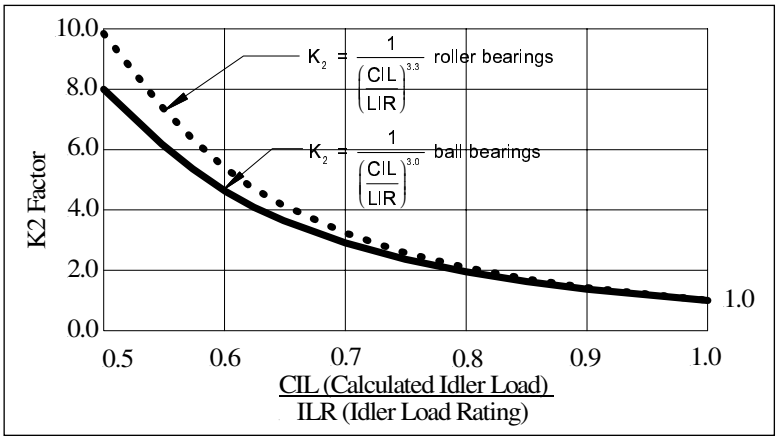

Figure 5.24
K_2 = Effect of load on predicted bearing L_{10} life

STEP NO. 4 K3A = EFFECT OF BELT SPEED ON PREDICTED BEARING L_{10} LIFE

CEMA L_{10} life ratings are based on 500 rpm. Slower speeds increase life and faster speeds decrease life. Figure 5.25 shows this relationship.

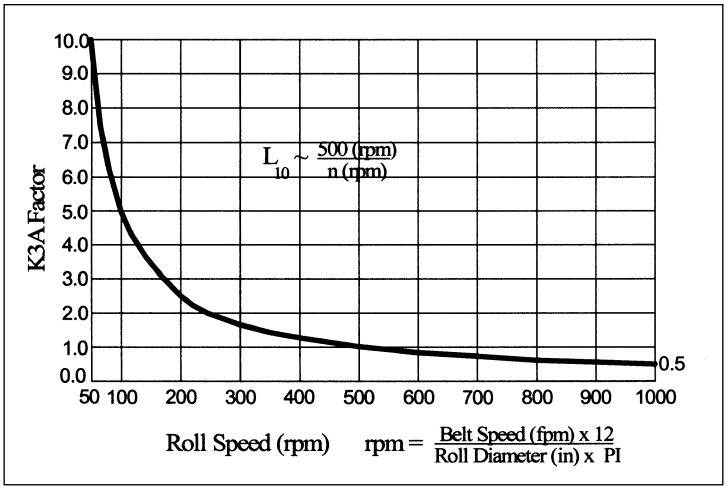

Figure 5.25
K3A = Effect of belt speed on predicted bearing L_{10} life

STEP NO. 5 K3B = EFFECT OF ROLL DIAMETER ON PREDICTED BEARING L_{10} LIFE

For a given belt speed, using larger diameter rolls will increase idler L_{10} life. Figure 5.26 depicts L_{10} life adjustments for various roll diameters using 4 inch diameter as a value of 1.0. Percent life increase can be calculated for each roll diameter increase.

Chapter Outline Slightly Modified

BELT TENSION AND POWER ENGINEERING

- Scope
- Introduction
  - CEMA Conveyor Design Evolution
  - Belt Conveyor as a Basic Machine
  - Tension Orientated Design
  - Tension and Friction Terminology
- Definition of the Three Conveyor Cases
  - Basic Conveyor
  - Standard Conveyor
  - Universal Conveyor
- Belt Tension Calculations for Basic Conveyors
  - Case 1
- Belt Tension Calculations for Standard Conveyors
  - CEMA Standard Historical Method
  - A Summary of the CEMA Standard Historical Method
- Belt Tension Calculations for All Conveyors: Universal Method
  - Case 2
  - Mass and Energy
    - Gravity
    - Bulk Material Acceleration
    - Inertia
  - Main Resistances
    - Load Independent Friction
      - Skirtboard Seal Friction
      - Idler Seal Drag
    - Load Dependent Friction
      - Idler Bearing Losses
      - Belt Deformation
      - Belt on Idler Alignment Friction
        - Garland Idler
      - Slider Bed
      - Skirtboard Friction
    - Load and Tension Dependent Friction
      - Material Trampling Loss
      - Liftoff Loss

Continued on following page...

- Point Sources of Tension
  - Pulleys as Passive Point Losses
    - Belt Cleaners
    - Belt Discharge Plows
  - Active Tension Contributions
    - Driving the Belt
    - Braking the Belt

Tension Management

- Analysis Process
  - Steady State Running Analysis
- Maximum Belt Tension
  - Operating Maximum Belt Tension
  - Temporary Operating Maximum Belt Tension
  - Starting and Stopping Maximum Tension
  - Curves
    - Vertical Curves
    - Horizontal Curves
- Minimum Design Tensions
  - Minimum T_2 for Active Pulleys
  - Belt Sag between Idlers
- Transient Tension Simplified Approach
  - Calculation of Average Acceleration and Deceleration Forces
    - Moving Mass
  - Passive Speed Change
  - Active speed Change - Acceleration/Deceleration
    - Startup and Shutdown
  - Loading

Component Tension Characteristics

- Belt
  - Energy Loss or Resistance
  - Belt Strength
    - Transient Load Safety Factor
    - Splice
  - Modulus/Stiffness
    - Longitudinal Stretch
    - Speed of Tension Change
    - Cross Section Properties
  - Weight

Continued on following page...

- Idler
  - Drag
    - Lifetime Affects
    - Environmental Seal Contamination
  - Spacing
  - Alignment
    - Tracking
    - Surface Friction
  - Roll Run Out
  - Inertia
- Pulley
  - Torque Transferal
    - Pulley Diameter
    - Lagging
  - Structural Implications - Running vs Transient Loads
  - Pulley Inertia
- Drive Components
  - Torque and Power
  - Drive Inertia Considerations
  - Drives
  - Brakes
  - Backstops
  - Drive System and Control
- Takeup
  - Constant Tension from Automatic Takeups
    - Takeup Tension Deadband
      - Hysterisis
      - Takeup Reaction Time
  - Constant Belt Length Fixed Takeup
- Loading Point
  - Material Entry Geometry
  - Receiving Belt Equipment
- Accessories

Conveyor as a System

- Optimization
  - Component Implications
  - Maximum Belt Tension
    - Active Pulley Locations
    - Minimize T at Takeup
    - Tension vs Energy Cost
  - Overall Efficiency
    - DIN f
    - Transport Efficiency f_e

Continued on following page...

- System Interactions
  - Component Location
    - Active Pulleys
      - Multiple Pulley Drives
      - Clustered Drives
      - Booster Drives
      - Tail Drives
    - Takeup Location
  - Belt Stretch Influences
    - Local Belt Stretch
    - Fixed Takeup or Constant Length Belt
    - Automatic Takeup Response
  - Reversing Conveyor
    - Reversing Conveyor Fixed Takeup
    - Reversing Conveyor Single Automatic Takeup
    - Reversing Conveyor Dual Drive
  - Transient Behaviors
    - High Dynamic Tensions
    - Festooning from Low Tensions
    - Effect on Material Carried
    - Belt Stretch Potential Energy
    - Drive or Brake Slip
    - Unexpected Failures
    - Belt Flap
- Design Tools
  - Iterative Process
  - Software Attributes

Example Conveyor Analysis

Scope

This chapter describes the calculation of the conveying forces and their interactions for use as primary inputs to the sizing and operating requirements for components that make up a conveyor transporting bulk materials. The following methods represent the CEMA methods for the consistent design of belt conveyors for bulk materials based on the length and complexity of the design. There are three design methods presented in this chapter, Basic, Standard and Universal, based on the complexity of the conveyor design and the desired level of accuracy. The Universal method is a new CEMA design procedure that, when applied by an experienced conveyor engineer, should predict the power required to operate a conveyor for a wide range of applications with an accuracy of 110 ± 10% of the actual power. The Universal method allows the incorporation of specialized knowledge for an improved understanding of the various component forces and resistances of conveyor systems of any length or configuration.

Introduction

CEMA CONVEYOR DESIGN EVOLUTION

The earliest belt conveyor engineering methods as used in the first half of the 20th century were dependent upon empirical solutions that had been developed by various manufacturers and consultants in this field. A second generation design method was developed by CEMA in the early 1960s based on the design practices and experiences of its member companies. The belt conveyor engineering analysis, information, and formulas represented developments using observations and tests of actual belt conveyor operations and the best mathematical theory and analysis tools available at the time. These methods included a breakdown of tension and power contributions from several friction mechanisms and various components in a manner that permitted the separate evaluation of the effect of each factor. Within their range of applicability, they provided consistent and safe designs while allowing design optimization and extrapolation for a commercially aggressive and maturing industry.

The formulas and methods described below are intended to continue that purpose recognizing the advances in many elements of conveyor design and the ability of computers to analyze the changing state of belt tension for alternate configurations of very long and complex conveyors. Those familiar with the previous version of this chapter will see a familiar pattern which is to establish a discrete and somewhat independent approach to the various design elements but with added functionalities as compared to the previous system approach. This level of detail, while possible with manual calculations, is primarily intended to provide a foundation for the use of computer programs in combining and managing the design concerns. This Chapter is also intended for instructional purposes to help assure that basic lessons and safe practices of conveyor design are understood and passed on to continuing generations of conveyor designers who might otherwise understand conveyor design as a simple numerical exercise.

BELT CONVEYOR AS A BASIC MACHINE

A belt conveyor is fundamentally a one dimensional machine and clearly follows physical laws. An understanding of classical mechanics and Newton's Laws of Motion provide a foundation for methods described in the balance of this chapter.

In summary, particularly relevant concepts from classical physics include:

1. Conservation of Energy: The amount of energy remains constant and energy is neither created nor destroyed. Energy can be converted from one form to another (potential energy can be converted to kinetic energy) but the total energy remains fixed.
2. Potential Energy: Potential energy is the stored energy by virtue of the position of an object. $PE = M \times g \times H$
3. Kinetic Energy: Kinetic energy is the energy of motion. $KE = 1/2 \times M \times V^2$.

Belt Tension Calculations for Basic Conveyors *Cont.*

This conservative calculation for inclined conveyors similar to those shown in Fig 6.3 and 6.4 up to 800 ft long, and at maximum loading, W_m, is suitable for drive sizing and component selection, though not optimized. In particular, the lift tension for steep conveyors can be much more than this. For example at an incline of 10 degrees, tan (10°) = 0.176 >> 0.04, making accurate calculation of the main resistance relatively unimportant. Point resistances for very short conveyors and load independent resistances for very lightly loaded conveyors, both discussed below, should also be incorporated if this method is used.

CASE 1

The single flight conveyor shown in Fig 6.1 will be used to illustrate the basic calculations with these inputs;

L = 400 ft
H = 70.5 ft
Q = 2500 ton/hour (tph)
V = 600 ft/min (fpm)
W_m = 139 lbf/ft
BW = 48 in
W_b = 11.4 lb/ft
S_i = 4 ft on carry side; D6 35 degree idlers on carry side
S_i = 12 ft on return side; single roll D5 return idlers
T_{tu} = 5500 lb, Tension at takeup

For the Case 1 example, T_e is calculated to be 12,380 lb. That is, the drive must provide 12,380 lb of pull to maintain belt movement. On this 10° inclined conveyor, 79% of T_e is used to lift the material.

Belt Tension Calculations for Standard Conveyors

CEMA STANDARD HISTORICAL METHOD

The 5th and prior editions of this book provided a calculation intermediate in complexity and accuracy to that described immediately above and the one that follows. Though not described in detail, it is addressed here to establish its continued validity for the conveyors for which it was developed.

In particular, calculations are provided for the required power and the main resistance Te through variables called K_y, K_x (Appendix C) and K_t (Equation 6.18) provided is applicable for conveyors in which the average belt tension is 16,000 lbs or less and for conveyors up to 3,000 ft long with a single slope and a 3% maximum sag of the belt between the troughing and between the return idlers. The return idler spacing is 10 ft nominal and loading of the belt is uniform and continuous. Data tables provide K_y for idler spacing between 3 ft and 5 ft. In addition, it should be noted that though K_y has been successfully extrapolated to a much wider range of applications, the values provided were developed from testing on belts with fabric carcass in widths 48 inches and less. K_x is somewhat dated but is considered satisfactory for use with this method.

In this range of applications, the results from this method and the more detailed universal method that follows will be similar when the applicable parameters in the latter are selected. Clearly, the methods do not use the same range of inputs so exact agreement cannot be expected. This method can be applied to individual flights similar to that discussed below so that intermediate tensions can be found for use in calculating vertical curves.

Belt Tension Calculations for Standard Conveyors *Cont.*

A SUMMARY OF THE CEMA STANDARD HISTORICAL METHOD

A summary excerpt of the Standard CEMA method:

"To determine the effective tension, T_e, it is necessary to identify and evaluate each of the individual forces acting on the conveyor belt and contributing to the tension required to drive the belt at the driving pulley. T_e is the final summarization of the belt tensions produced by forces such as:

1. The gravitational load to lift or lower the material being transported
2. The frictional resistance of the conveyor components, drive, and all accessories while operating at design capacity
3. The frictional resistance of the material as it is being conveyed
4. The force required to accelerate the material continuously as it is fed onto the conveyor by a chute or a feeder

The basic formula for calculating the effective tension, T_e, is:

Figure 6.6
Standard method equation

$$T_e = L \times K_t \left(K_x + K_y \times W_b + .015 W_b\right) + W_m \left(L \times K_y + H\right) + T_p + T_{am} + T_{ac}$$

Where:

L, H, W_b, and W_m are as previously defined

K_x (lbf/ft) = Idler Resistance Factor

K_y = Belt Resistance Factor (dimensionless)

K_t = Temperature Correction Factor (dimensionless)

T_p (lbf) = Tension due to the belt flexure around pulleys and pulley bearing resistance

T_{am} (lbf) = Tension resulting from the force to accelerate the material as it is fed onto the belt

T_{ac} (lbf) = Tension from accessories

T_p , T_{am} , T_{ac} are additional tension (lbf/ft) contributions as included in this edition

Note the implication of a single drive and unified source of tension loss. The details of this calculation may be found in the 5th edition of Belt Conveyors for Bulk Materials and from CEMA member companies. This equation should not be mixed with the basic or universal methods. For the Case 1 example, T_e is calculated to be 11606 lbf. This is 94% of that calculated by the simplified method while the friction only, without the lift force, is 70% of the simpler method.

Belt Tension Calculations for All Conveyors: Universal Method

The remainder of this section describes general calculations applicable to all conveyors without limit as to length or profile. This Universal method is based on all understanding of the characteristics of the major energy loss sources applied to standard components and constructions and with application parameters applicable to normal limits to speed and tension. Nonetheless, the Universal method has benefits due to a much broader scope than the Basic and Standard methods.

The forces seen in the belt can be categorized as follows;

- Work done on the belt from external sources.
- Internal forces associated with a change of velocity
- Uniform internal tension

The Universal method addresses the first of these which are calculated as operating at a steady speed. The calculations parallel the Basic and Standard historical CEMA calculation but with fewer constraints for their applicability. Therefore, most elements, except those relating to issues of the main resistances, may be shared among all three methods. The second category of belt forces listed above develop when the first is unbalanced. The third category is intentionally applied by the designer and is

Belt Tension Calculations for All Conveyors: Universal Method *Cont.*

distributed uniformly around the belt circuit as pre-stretch. The latter two categories are treated as tensions that are *managed* by the designer to assure overall operating success and discussed later in this chapter.

Nominal accuracy of this method is +/-10% but the default values provided in this section are conservative with the intent that so that the use of these equations by an inexperienced engineer produces a conservative result. Certain operational and safety critical components such as brake sizing or with downhill flights should include additional safety factors described as R_r for each of the loss categories to account for this conservative approach. An experienced CEMA conveyor engineer utilizing values and design factors that are known to be representative of the application being designed can use the Universal method to produce results that are within the 110% ± 10% target range.

The Universal method provides design parameters and empirically fit equations to quantify the energy loss categories and to simplify the calculation tension loss. The following list summarizes the range of components and constructions directly useable with the equations provided.

- CEMA Flat, 20, 35 and 45 degree equal length 3 roll idlers
- 1500 ft/min maximum belt speed
- Operating temperatures > -25°F – 120°F
- Common belt cover materials i.e. Natural, SBR etc.
- Multiple belt constructions with equal stiffness plies
- Maximum Belt width = 96 in
- Maximum Idler spacing = 10 ft
- Free flowing materials; Maximum Angle of Repose = 45 deg

Refer to the 'Component Tension Characteristics' section of this chapter, Chapter 16, Appendix F or contact a CEMA member to extend or extrapolate beyond these limits.

This Universal calculation is similar to the historic method in that it sums various sources of loss for the total resistance to movement. It is different in that it focuses on addressing individual flights (ref subscript 'n') as needed for long complicated conveyors and in the detail and accuracy of calculation of the various constituent resistances. This section quantifies the tension changes at each flight while the discussion of Tension Management below addresses how they all accumulate appropriately into a total conveyor.

In summary, the calculation and the text that follows describe the tension added at each flight as follows:

Figure 6.7
Universal method equation

$$\Delta T_n = \Sigma\Delta T_{Energy\ n} + \Sigma\Delta T_{Main\ n} + \Sigma\Delta T_{Point\ n}$$

Where:

$$\Sigma\Delta T_{Energy} = \Delta T_{Hn} + \Delta T_{amn}$$

$$\Sigma\Delta T_{Main\ n} = \Delta T_{ssn} + \Delta T_{isn} + \Delta T_{iWn} + \Delta T_{bin} + \Delta T_{mn} + \Delta T_{sbn} + \Delta T_{sn} + \Delta T_{mzn}$$

$$\Sigma\Delta T_{Point\ n} = \Delta T_{pxn} + \Delta T_{prn} + \Delta T_{bcn}$$

Where all apply to the effect in flight or pulley n and;

ΔT_n (lbf) = Total change in belt tension to cause steady belt speed
ΔT_{Hn} (lbf) = Change in belt tension to lift or lower the material and belt
ΔT_{amn} (lbf) = Tension added in loading to continuously accelerate material to belt speed
ΔT_{ssn} (lbf) = Tension change due to the belt sliding on skirtboard seal
ΔT_{isn} (lbf) = Change in tension from idler seal friction
ΔT_{iWn} (lbf) = Change in tension from idler load friction

Belt Tension Calculations for All Conveyors: Universal Method *Cont.*

ΔT_{bin} (lbf) = Tension increase from visco-elastic deformation of belt

ΔT_{mn} (lbf) = Tension loss from idler misalignment

ΔT_{sbn} (lbf) = Drag due to Slider Beds

ΔT_{sn} (lbf) = Tension change due to bulk materials sliding on skirtboards

ΔT_{mn} (lbf) = Tension change due to bulk materials moving between the idlers

ΔT_{pxn} (lbf) = Tension change due to belt bending on the pulley

ΔT_{prn} (lbf) = Tension change due to pulley bearings

ΔT_{bcn} (lbf) = Tension added due to belt cleaners and plows

ΔT_{dpn} (lbf) = Tension added due to discharge plow

The various ΔT contributions are described individually below for a particular section or flight "n". When pulleys are considered as separate flights in series with the carrying and return flights, the other sources of resistance are set to zero for the pulley flights.

The relative importance of the various elements described below varies widely and none can be ignored, though they may have very small contributions in particular conveyors.

The examples referred to as Case 2 use Figure 6.2 flights as follows with the same loading as used in Case 1 from the simple conveyor example.

CASE 2

L_1= 15 ft; H_1= 0 ft loading

L_2= 500 ft; H_2= 0 ft

L_3= 500 ft; H_3= 0 ft

L_4= 300 ft; H_4= 53 ft vertical curve

L_5= 400 ft; H_5=70.5 ft 10 degree incline

L_n and H_n are the same for the corresponding return flights

MASS AND ENERGY

Gravity

A precise and often major source of belt tension is the work involved with inclined or declined conveyance paths due to the Potential Energy change in the bulk material and belt for a height change Hn (Fig 6.2) The tension is sensitive to the direction of travel so that with uphill movement the tension increases and a downhill or negative slope angle causes reduction in this component of tension along the conveyance direction as gravity pulls the conveyor down the slope;

Figure 6.8
Tension due to lifting the belt and bulk material

$$\Delta T_{Hn} = H_n \times (W_b + W_m)$$
$$H_n = \tan(\theta_{in}) \times L_n$$

Where:

ΔT_{Hn} (lbf) = Change in belt tension in flight n to cause steady belt speed.

H_n (ft) = Lift or drop (-H) over the length L_n of flight n.

θi_n (deg) = Uniform or average angle of incline(+) or decline (-) in direction of movement over the flight length L_n.

Gravity or Potential Energy is considered to have a continuous effect on tension along the length of any slope from earth horizontal. It should be observed that the weight of the carry side belt and the return side belt cancel each other out from the perspective of total conveyor T_e but need to be included in circuit calculations to identify the local tension at any point. For flights including belt curves in a vertical plane (See Chapter 9) use H as described above, take an average slope or use trigonometry over the change incline with the arc radius of the curve.

Belt Tension Calculations for All Conveyors: Universal Method *Cont.*

Idler Seal Drag

The support idlers resist rotation and belt movement by a combination of mechanisms internal to the idler roll and influenced by various elements of their design. The rotating resistance is a torsional moment which is overcome at the belt line as tangential force acting on a moment arm equal to the roll radius. Reference Figure 6.16.

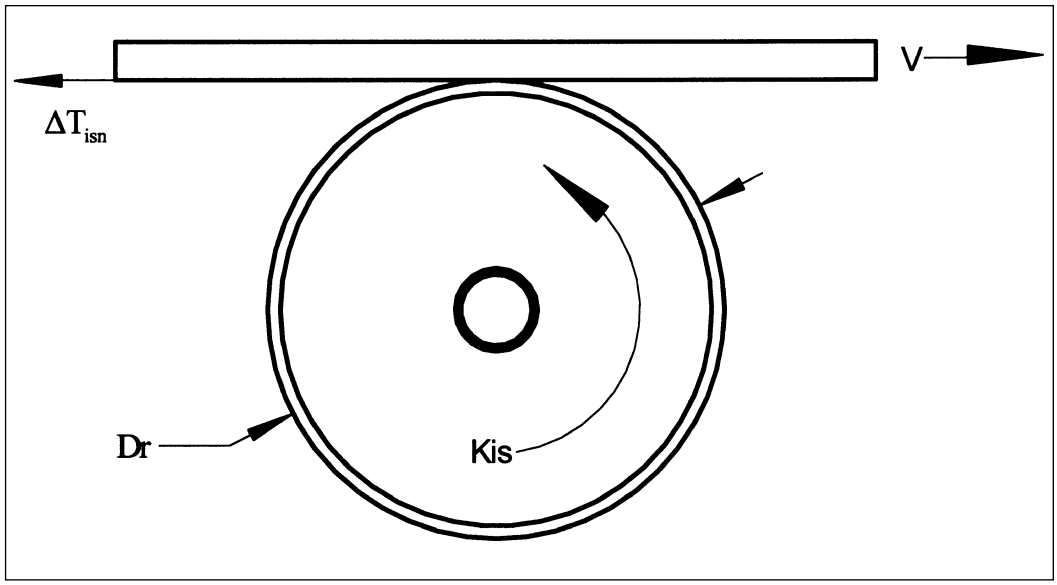

Figure 6.16
Idler belt line reaction

This section addresses the expected resistance that is not related to the applied load and is lumped into the viscous and sliding drags associated with the roll seal and lubrication. Though some interaction exists between the seal and bearing drags, the two are treated as independent in addition to the bearing load function in the following section.

The method provided below provides a simple estimate for the resistance provided by the idler seal. The actual resistance varies widely so that the use of actual values is suggested for accurate predictions. The following equation is constructed to allow specific values to be incorporated.

$$\Delta T_{isn} = \left[\left(\frac{3.82\times V}{D_r} - 500\right)K_{iv} + K_{is}\right] \times \frac{1}{\frac{D_r}{2}} \times \frac{K_{iT}\times n_r}{S_{in}} \times L_n$$

Figure 6.17
Idler seal friction calculation

Where:

ΔT_{isn} (lbf)	= change in tension in flight 'n' from idler seal friction
K_{iV} (in x lbf/rpm)	= torsional speed effect-see Table 6.19
K_{is} (in x lbf)	= seal torsional resistance per roll at 500 rpm-see Table 6.19
K_{iT}	=Temperature correction factor per Equation 6.18
n_r	=number of rolls per idler set
D_r (in)	=roll diameter
T_F (°F)	=Ambient operating temperature

Figure 6.18
Temperature correction factor equation

$$K_{iT} = 1.114\times10^{-8}\times T_F^4 - 3.763\times10^{-6}\times T_F^3 + 4.458\times10^{-4}\times T_F^2 - 2.136\times10^{-2}\times T_F + 1.333$$

Consult a CEMA member for K_{iT} values to be used for designing long horizontal conveyors operating at low temperatures.

Belt Tension Calculations for All Conveyors: Universal Method *Cont.*

Table 6.19
Maximum expected individual idler roll seal torques for various CEMA idler series. (Use with R_{ris} and R_{riV} discussed below)

Idler Series	Kis (in x lbf)	KiV (in x lbf/rpm)
B	3.00	0.004
C	3.25	0.004
D	4.00	0.004
E	7.25	0.003

**K_{is} can be measured as described in Appendix F. By testing at three different belt speeds a value for K_{iV} can be determined for a specific idler.*

The values in Table 6.19 are provided in terms of torque in order to ease the application of actual operating performance for use in equation 6.16. If possible, the torsional resistance at the actual rotational speed should be obtained in this case and substituted directly as K_{is} with K_{iv} set to 0.0. Likewise, test values at expected operating temperature should be used so that K_{iT} can also be set to 1.0.

When seal drag is found to be an important element of belt tension as in overland or downhill conveyors, the actual performance values are much preferred over the defaults provided in Table 6.19 since these values represent the maximum expected drag from product produced by CEMA idler manufacturers including varying seal designs and grease fills which have strong influences from speed and temperature. The idler rotating resistance varies over it's lifetime from high torque during break-in when it is new to easy rolling during it's prime operation to high resistance if the bearing or seal begins to fail. This is discussed further later in this chapter. Separate from long term changes are breakaway resistance and a warm up time where the roll resistance drops off to a value after several minutes of running from the stopped, cold state. The above formulas apply to the running state but the breakaway condition may be estimated by use of a temperature 40°F less than ambient in the K_{iT} formula. The inevitability of manufacturing variability within and between production lots should be incorporated into any test regime used to obtain 'typical' values appropriate for design.

R_{ris} = 0.20 with R_{riV} = 0 should be applied where appropriate if the default values of K_{is} and K_{iv} from Table 6.19 are used. Alternatively, since idler designs vary widely, actual manufacturer data should be used if available, including the actual R_{ri}, calculated from the expected range of K_{is} and break in effects.

In Case 2, Flight 5, CEMA D5 3 Roll Troughing Idlers D6 3 roll troughing idlers are used on 4ft Spacing. For operation at 0°F:

Variables belong on pg. 109

$$n_r = 3.0$$
$$D_r = 6.0 \text{ in}$$
$$S_{i5} = 4.0 \text{ ft}$$
$$K_{iV} = 0.004 \text{ in}\times\text{lbf/rpm}$$
$$K_{is} = 4.0 \text{ in}\times\text{lbf}$$
$$K_{iT} = 1.33$$
$$\Delta T_{is5} = \left[\left(\frac{3.82\times V}{D_r} - 500\right)K_{iv} + K_{is}\right]\times\frac{1}{\frac{D_r}{2}}\times\frac{K_{iT}\times n_r}{S_{in}}\times L_n = 470 \text{ lbf}$$

Figure 6.20
Example idler seal friction calculation

Belt Tension Calculations for All Conveyors: Universal Method *Cont.*

Load Dependent Friction

Load dependent friction losses vary with the material and belt weight and, in some cases, from belt tension components where idler forces are required to control curved belt paths. A prime purpose of idlers is to support the gravity loading from the belt and material from mid span to mid span of the adjacent idlers. While doing so, belt tension losses are seen as reaction forces parallel to the belt movement at each idler. This section describes the interaction between those loads perpendicular and, those loads parallel to belt movement. Both load components are transmitted to the idler by an accumulating effect in the belt carcass or tension supporting element of the belt. In the following, W_m=o when the belt is empty. When belt tension components cause additional normal loading on the idlers, these should be added to (W_m + W_b) used throughout this section.

Idler Bearing Losses

In addition to load independent seal resistance, the idler resistance to rotation also varies with load as a Coulomb friction. This is due to internal sliding in the bearing and varies with the bearing used.

Table 6.21
Idler rotating resistance load factor C_{iW} (in-lbf/lbf)

Idler Series	Taper Roller	Deep Groove Ball
B	0.00155	0.00125
C	0.0017	0.00145
D	0.0017	0.00185
E	0.0029	0.00255

$$\Delta T_{iWn} = \frac{C_{iW} \times (W_b + W_m)}{\frac{D_r}{2}} \times L_n$$

Figure 6.22
Idler load friction effect

Where:

ΔT_{iWn} (lbf) = Change in tension in flight 'n' from idler load friction.

C_{iW} (in x lbf/lbf) = Torsional load effect, Table 6.21

D_r (in) = Idler roll diameter.

For Flight 5 of Case 2:

$$C_{iW} = 0.00185 \text{ in} \times \text{lbf/lbf}$$

$$\Delta T_{iW5} = \frac{C_{iW} \times (W_b + W_m)}{\frac{D_r}{2}} \times L_5 = 37 \text{ lbf}$$

Figure 6.23
Idler load friction calculation

Use R_{riW} = 0.67. Since idler and bearing designs vary widely, data for critical applications, including break in time, should be obtained from a CEMA member idler manufacturer.

Belt Deformation

The belt rubber is squeezed between the idler roll and the tensioning elements of the belt carcass as it transfers the material and belt weight to the idler roll. As the belt contacts the leading edge of the idler roll, movement is hindered as the rubber deforms under this squeezing pressure. Conversely, belt movement is aided on the back side of the roll from the restoring reaction as the indentation deformation decreases. Since the rubber, as a viscoelastic material, does not react instantaneously, a portion of the work of deformation is not returned. The resulting deformation energy loss is absorbed by the belt as heat and seen as a net resistance to movement in the direction of belt movement through the moment that develops due to the offset between the center of the roll and the center of the vertical reaction as shown in Figure 6.24.

Belt Tension Calculations for All Conveyors: Universal Method *Cont.*

Where:

ΔT_{bin} (lbf) = Tension increase from viscoelastic deformation of the belt cover

T_F (° °F) = Operating ambient temperature

K_{biR} = Viscoelastic characteristic of belt cover rubber -Equation 6.29

P_{jn} = Cover indentation parameter (dimensionless)

E_o (psi) = Rubber stiffness property, Table 6.28

D_r (in) = Roll diameter

h_b (in) = Belt cover thickness

w_i = Load distribution factor, Table 6.26

The load on the idler affects the amount of energy loss. Since the gravity load supported by the idler is not uniform along the width of a carrying idler, the resistance is also not uniform across the belt width. Parameter wi is provided for the load distribution on various troughing angles. See Chapter 16 for further discussion of this calculation.

Table 6.26
Load distribution factor table

BELT AND MATERIAL					
Troughing Angle	**20 deg.**	**35 deg.**	**45 deg.**	**Flat**	**10 deg. V Return**
w_i	1.28	1.36	1.39	1.14	NA
BELT ONLY					
w_i	1.265	1.406	1.465	1.00	1.45

Figure 6.27
Calculation of the belt cover viso-elastic rubber constant

$$K_{biR} = b_0 + b_1 \times \left[1 + \tanh\left[b_2 + b_3 \times \left(\log(V) + aT_{exp}\right)\right]\right]$$

$$aT_{exp} = a_0 + a_1 \times T_F + a_2 \times T_F^2 + a_3 \times T_F^3 + a_4 \times T_F^4 + a_5 \times T_F^5$$

Where:

T_F (°F) = Operating temperature.

V (ft/min) = Belt Speed.

a_n and b_n = Constant coefficients used in rubber characterization equations per 6.28

Table 6.28
Constants for equation 6.27, K_{biR} with E_o = 1,644 psi

	FABRIC BELTS		STEEL CABLE BELTS	
n	**a_n**	**b_n**	**a_n**	**b_n**
0	-2.56E-02	0.072	-2.56E-02	0.140
1	-5.74E-02	0.029	-5.74E-02	0.029
2	1.06E-04	-1.750	1.06E-04	-1.750
3	-2.61E-06	1.000	-2.61E-06	1.000
4	3.20E-08		3.20E-08	
5	-1.03E-10		-1.03E-10	

The accuracy of the above calculation varies widely with cover compound and belt construction and condition so that R_{rbi} = 0.67.

The values for this table can be used for fabric belts. For steel cable belts use a value of b0 = .140. All other constants in table 6.28 for steel cable belts remain the same as for fabric belts.

Belt Tension Calculations for All Conveyors: Universal Method *Cont.*

Example: With a belt pulley cover of 0.125 in and at 0° F, Flight 5 of Case 2 predicts as follows:

$$h_b = 0.125 \text{ in}$$

$$D_r = 6.0 \text{ in}$$

$$T_F = 0 \text{ deg}$$

$$w_i = 1.36$$

$$aT_{exp} = a_0 + a_1 \times T_F + a_2 \times T_F^2 + a_3 \times T_F^3 + a_4 \times T_F^4 + a_5 \times T_F^5 = -0.026$$

$$K_{biR} = b_0 + b_1 \left[1 + \tanh\left[b_2 + b_3 \times \left(\log(V) + aT_{exp}\right)\right]\right] = 0.123$$

$$P_{j5} = \left[\frac{(W_b + Wm) \times S_{i5} \times h_b}{E_O \left(\frac{D_r}{2}\right)^2 \times BW}\right]^{\frac{1}{3}} = 0.047$$

$$\Delta T_{bi5} = K_{biR} \times P_{j5} \times (W_b + W_m) \times w_i \times L_5 = 476 \text{ lbf}$$

Figure 6.29
Example with a belt pulley cover of 0.375 in. and at 0°F, Flight 5 of Case 2

Belt on Idler Alignment Friction

Idlers axes are considered perpendicular to the direction of belt travel. However, unless specially manufactured and installed very precisely, a small misalignment angle inevitably exists that causes a small transverse slip between the idler and the belt. This angle is referenced in plan or top view between the roll centerline and a perpendicular to the belt centerline or direction of movement. See Fig 6.30. The transverse force components average themselves out in both transverse directions so that the belt tracks satisfactorily, often from intentional correction during commissioning or with training idlers.

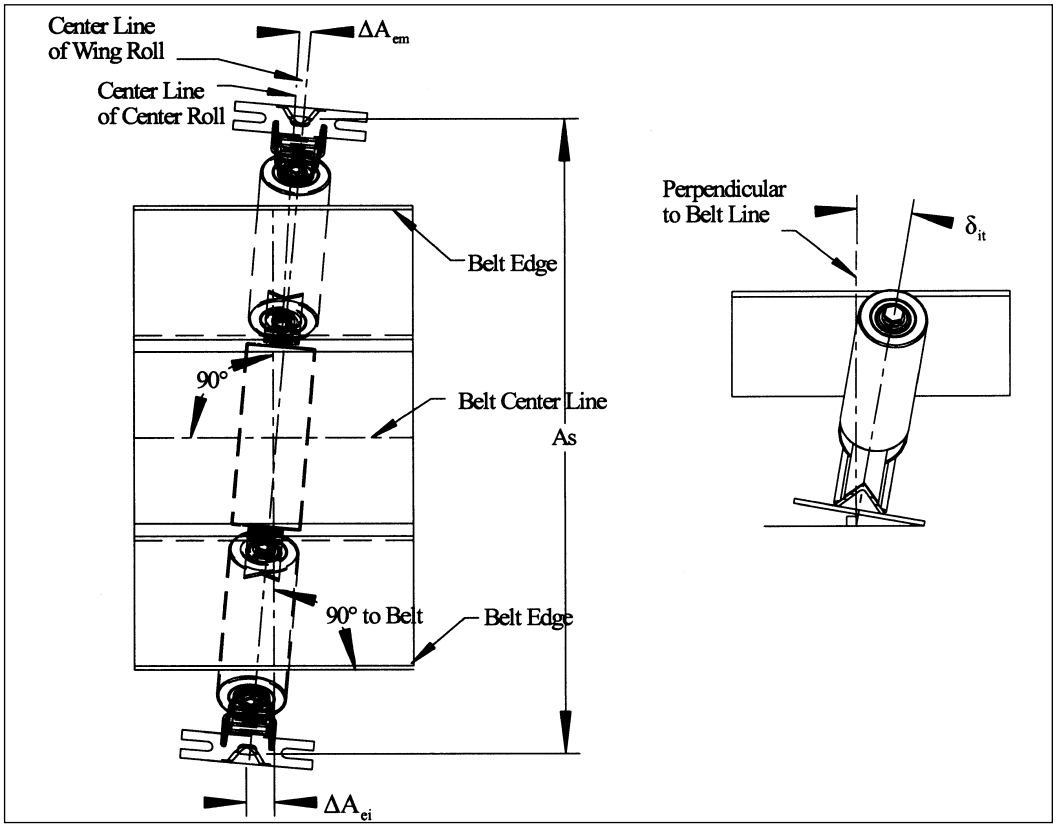

Figure 6.30
Idler misalignment

Belt Tension Calculations for All Conveyors: Universal Method *Cont.*

This transverse sliding causes a retarding force seen as tension loss that is significant for conveyor design per the following equations:

$$\Delta T_{imn} = C_{im} \times L_n \times (W_b + W_m)$$

$$C_{im} = C_{bi} \times e_{im}$$

$$e_{im} = \frac{\Delta A_e}{A_s}$$

$$\Delta A_e = \Delta A_{ei} + \Delta A_{em} + \Delta A_{et}$$

Figure 6.31
Idler misalignment force calculation

Where:

ΔT_{mn} (lbf) = Tension loss in flight "n" from idler misalignment

C_{im} = Design factor for frictional resistance due to idler misalignment

C_{bi} = Friction factor for sliding between belt cover and idler material

e_{im} (in/in) = Average misalignment of idler axis to belt longitudinal axis

ΔA_e (in) = Effective total deviation from perpendicular to belt travel

ΔA_{ei} (in) = Expected average installation deviation referenced from center roll to perpendicular to belt travel

ΔA_{em} (in) = Effective misalignment due to manufacturing variation

ΔA_{et} (in) = Effective misalignment due to intentional inclination of idler frame δit, Equation 6.32

δ_{it} (in/in) = Intentional inclination of idler frame or wing roll to aid in belt tracking

A_s (in) = Distance between idler support points in the direction of belt width
Refer to CEMA Standard 502, most current edition

β (deg) = Idler troughing angle

B_w (in) = Wing roll length

Figure 6.32
The equation of effective idler misalignment due to idler inclination for fixed frame idlers.

$$\Delta A_{et} = 2 \times \frac{A_{WC}}{A_{SC}} \times \delta_{it} \times \tan(\beta) \times A_s$$

Default values for design are as follows;

C_{bi} (in) = 0.5 sliding friction factor for steel roll on rubber belt cover

C_{bi} (in) = 0.75 sliding friction factor for rubber roll on rubber belt cover

ΔA_{ei} (in) = 0.375 for permanent rigid structure with deliberate angular alignment procedures
= 0.5 when installed without alignment measurement
= 0.75 in. when mounted on independent, imprecise footings
= 1.5 for movable or unstable footing, roof hung and other difficult installation conditions

ΔA_{em} (in) = 0.1 in for variation from parallel of wing rolls to the center roll on a common idler set
See idler discussion later in this chapter.

δ_{it} (in/in) = 0 (tangent of inclination angle in degrees)

Where A_{SC} is per Chapter 4 Fig 4.9 and;

$$A_{wc} = BW^2 \times \left[r_{sch}{}^2 \times \left(\frac{\varphi_c}{2} - \frac{\sin(\varphi_c) \times \cos(\varphi_c)}{2} \right) + b_{wmc}{}^2 \times \frac{2 \times \sin(\beta) \times \cos(\beta)}{2} \right]$$

With;

$$\varphi_c = \arcsin\left(\frac{b_c}{2 \times r_{sch}} \right)$$

Belt Tension Calculations for All Conveyors: Universal Method *Cont.*

For equal roll idlers a default value may be used;

$$\frac{A_{WC}}{A_{sc}} = \frac{1}{6}$$

It should be noted that the tension required to overcome idler tilt varies strongly with the load on the wing roll and the actual load should be calculated and used for precise prediction of tension changes. For critical conveyors and high sag conveyors an additional wing roll loading, a factor of up to 2.3 may be applied to A_{wc} due to dynamic forces which develop as the material cross section reforms between each idler pair.

These values will vary and should be altered if specific information on actual practice is available. See Figure 6.30 for terminology with the idler discussion later in this chapter. In particular, ΔA_{ei} can and should be less than the default values provided. Refer to Appendix D. It should be noted that vertical and horizontal alignment is integral to sound, well aligned structure but do not have the major impact on resistance to movement that angular alignment does. Measurement of typical installations, especially as affected by belt width, and precise installations specifications including quality control may be warranted to obtain a reliable prediction of this loss category.

R_{rim} = 0.67. Data for critical applications should be obtained from a CEMA member idler manufacturer and the installer

Considering steel rolls in standard CEMA constructed idlers to be installed with a tape measure on poured concrete footings, Flight 5 of Case 2 becomes;

$$C_{bi} = 0.5$$
$$A_s = BW + 9.0 = 57.0$$
$$\Delta A_{ei} = 0.5$$
$$\Delta A_{em} = 0.1$$
$$\delta_{it} = 0$$
$$\Delta A_{et} = 0$$
$$\Delta A_e = \Delta A_{ei} + \Delta A_{em} + \Delta A_{et}$$
$$e_{im} = \frac{\Delta A_e}{A_s} = 0.011$$
$$C_{im} = C_{bi} \times e_{im} = 0.0053$$
$$\Delta T_{im5} = C_{im} \times L_5 (W_m + W_b) = 316 \text{ lbf}$$

Figure 6.33
Example of steel rolls in standard CEMA constructed idlers, installed with a tape measure on poured concrete footings, Flight 5 of Case 2

Garland Idler

A similar phenomenon to that which causes ΔA_{et} occurs with garland or suspended idler sets. Note that these idlers are hung from the conveyor framework and are free to swing in the direction of belt movement. In this case, the total resistance to belt movement at the idler causes a similar δ_{it} misalignment, though it is self induced and the idler tilts in the opposite direction. The calculation of resistance, ΔT_{gmn}, due to the swinging action of the garland frame is similar to that for ΔT_{imn} but must be done after all of the other main resistances from this section are calculated. This procedure must be iterative since ΔT_{gmn} affects, and is affected by, ΔT_{sn} , described on the next page. The basic calculation proceeds as follows:

Belt Tension Calculations for All Conveyors: Universal Method *Cont.*

Figure 6.34
Calculation of the misalignment resistance from garland idlers

$$\Delta T_{gmn} = C_{mg} \times L_n \times (W_m + W_b)$$

$$C_{mg} = 2 \times \frac{A_{wc}}{A_{sc}} \times C_{bi} \times (\delta_g) \times \tan(\beta)$$

$$\delta_g = \frac{\Delta T_{ni}}{[(W_m + W_b) \times S_i + W_i]}$$

$$\Delta T_{ni} = \frac{\Delta T_n}{\frac{L_n}{S_i}}$$

Where:

ΔT_{mgn} (lbf) = Tension loss in flight n from self misalignment of garland idler

C_{mg} = Design frictional resistance from idler self alignment

C_{bi} = Sliding friction factor for roll on belt cover

W_i (lbf) = Swinging weight of idler

ΔT_{ni} (lbf) = Total tension loss from 'main resistances' in flight 'n' per idler

As a lower limit, ΔA_{ei} should not be less than 0.5 in for garland idlers in the basic misalignment calculation, including its effect on inducing ΔA_{et}.

Slider Bed

Occasionally fixed sliding surfaces or slider beds are used to support the belt and load. The sliding resistance varies widely with moisture, material and belt cover but the following design method should provide safe results for conveyor flights supported by sliding friction.

Figure 6.35
Calculation of Slider Bed Resistance.

$$\Delta T_{sbn} = C_{sb} \times (W_b + W_m) \times L_n$$

Where:

ΔT_{sbn} (lbf) = Tension loss from the slider beds in flight n.

C_{sb} = Sliding Friction Factor, Table 6.36.

Table 6.36
Sliding friction factor on rubber covered belt, reference Table 11.73

Slider Material	Csb
Steel	0.64 to 0.84
Polyethylene	0.56
Urethane	0.60 to 0.67

When slider bed friction is used, all of the other main resistances for a particular flight of slider beds are zero. As with skirt seals, if the slider bed is less than the full conveyor length then the above calculation can be used as a point resistance in combination with the other main resistances.

Values of 150% of the above should be used for breakaway conditions or startup conditions. Lower limit resistance values of R_{rsb} = 0.60. Since slider bed designs and materials vary widely, data for critical applications should be obtained from a CEMA member company.

Skirtboard Friction

When the bulk material is constrained within skirtboards, the force required to overcome skirtboard friction is normally larger per foot of skirtboarded conveyor than the force to move the loaded belt over the idlers. When the total conveyor length is many times that portion of the length provided with the skirtboards, the additional power requirements for the skirtboards is relatively small. However, if a large portion of the conveyor is equipped with skirtboards, the additional belt pull required may be a major factor in the effective tension required to operate the conveyor.

Belt Tension Calculations for All Conveyors: Universal Method *Cont.*

The skirtboard resistance is calculated as sliding Coulomb friction of the bulk material on the skirting. It is calculated by determining the total pressure of the material against the skirtboard, then multiplying this value by the appropriate coefficient of friction of the material handled. The total normal force against the skirtboard varies with the depth of material, the material weight and its internal friction angle

The pressure of the material against the skirtboard can be calculated with the wedge of material contained between a vertical skirtboard and the angle of surcharge of the material supported by both the skirt-board and the belt.

Figure 6.37
Tension due to material on the skirtboards

$$\Delta T_{sn} = C_s \times d_{ms}^2 \times L_n$$

Where:

ΔT_{sn} (lbf) = Tension change due to material sliding on skirtboarded flight n

C_s (lbf/ft/in^2) = Consolidated skirt friction and material property, Table 6.40

d_{ms} (in) = Contact depth of material on skirting, Figure 6.41

Figure 6.38
Contact depth on skirtboards

$$d_{ms} = \frac{A_m \times 144 - .25\left(W_s^2 - B_c^2\right) \times \tan(\beta) - .25W_s^2 \left[\frac{\varphi_s}{\sin(\varphi_s)^2} - \cot(\varphi_s)\right]}{W_s}$$

Where:

A_m is the material cross section area in ft^2.

$$A_m = \frac{Q \times 2000}{V \times \gamma_m \times 60}$$

and;

γ_m (lbf/ft^3) = Density of the bulk material.

φ_s = Material surcharge angle. (degrees when used with a trig function and in radians when used alone.)

β (deg) = Idler trough angle.

B_c (in) = Idler center roll length. Figure 6.39

W_s (in) = Skirtboard spacing. Figure 6.39

d_{ms} (in) = Depth of material sliding on the skirtboard. skirtboard per Figure 6.39

Where d_{ms} is calculated to be less than zero, the material does not drag on the skirting and no forces develop and ΔT_{sn} =0.

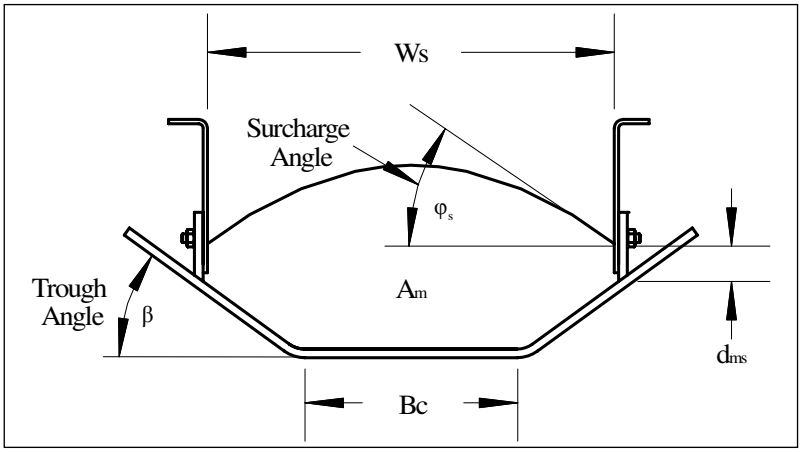

Figure 6.39
Depth of material on skirtboards

Belt Tension Calculations for All Conveyors: Universal Method *Cont.*

Table 6.40
Skirtboard friction factors, C_s

Material	C_s Factor
Alumina, pulverized, dry	0.121
Ashes, coal, dry	0.057
Bauxite, ground	0.188
Beans, navy, dry	0.080
Borax	0.073
Bran, granular	0.024
Cement, Portland, dry	0.212
Cement clinker	0.123
Clay, ceramic, dry fines	0.092
Coal, anthracite, sized	0.054
Coal, bituminous, mined	0.075
Coke, ground fine	0.045
Coke, lumps and fines	0.019
Copra, lumpy	0.020
Cullet	0.084
Flour, wheat	0.027
Grains, wheat, corn or rye	0.043
Gravel, bank run	0.115
Gypsum, 1/2" screenings	0.090
Iron ore, 200 lbs/cu ft	0.276
Lime, burned, 1/8"	0.117
Lime, hydrated	0.049
Limestone, pulverized, dry	0.128
Magnesium chloride, dry	0.028
Oats	0.022
Phosphate rock, dry, broken	0.018
Salt, common, dry, fine	0.081
Sand, dry, bank	0.137
Sawdust, dry	0.008
Soda ash, heavy	0.070
Starch, small lumps	0.062
Sugar, granulated dry	0.034
Wood chips, hogged fuel	0.009

Load independent skirt seal friction must also be added as described elsewhere.

If the flight length is greater than the skirt length which constrains material, this calculation can be used for a point source loss with the skirted conveyor length substituted for L_n. For skirtboards of material other than smooth steel, C_s, can be corrected using the ratio of the material to skirt sliding friction factors.

Assume Flight 1 of Case 2 is fully skirted with steel wear liner and loading takes place near the tail pulley. Skirtboard material drag is calculated with material properties as follows.

Figure 6.41
Example of skirtboard drag in Flight 1 of Case 2, fully skirted with steel wear liner and loading takes place near the tail pulley.

$$d_{ms} = \frac{A_m \times 144 - .25\left(W_s^2 - B_c^2\right) \times \tan\left(\beta\right) - .25 W_s^2 \left[\frac{\varphi_s}{\sin\left(\varphi_s\right)^2} - \cot\left(\varphi_s\right)\right]}{W_s}$$

x Rrsk

Belt Tension Calculations for All Conveyors: Universal Method *Cont.*

Where:
BW = 48.0 (in) belt width
V = 600 (fpm) belt speed
Q = 2500 (tph) tons per hour conveyed
γ_m = 90 (lbf/ft^3) bulk density
β = 35 (deg.) troughing angle
φ_s = .3491 surcharge angle in radians [or 20 (deg.) when used with a trig function]
W_s = 32.0 (in) width between skirts
B_c = b_c x BW = .371 x BW +.25 = 18.06 (in) center roll belt contact distance [Ref. Equation 3.8]

R rsk = Multiplier for possible lower skirt board resistance (dimsionless) default = 1.0

Then:
A_m = 1.54 (ft^2)
d_{ms} = 1.23 (in)

$$C_s = 12 \times \frac{\text{lbf}}{\text{in}^2\ \text{ft}}$$

L_1 = 15 (ft)
$\Delta T_{s1} = C_s \times d_m^2 \times L_1$
ΔT_{s1} = 3 (lbf)

Load and Tension Dependent Friction

The belt sags in the span between adjacent idlers due to the belt and material load being supported similar to a catenary. See Fig 6.42. The sag causes material deformation and energy loss. The sag of the belt and the path of the bulk material is affected by the particular belt tension at the point in question. Therefore, the tension and tension loss are interrelated so that predicting the sag and tension change becomes an iterative process as discussed later as tension management. The calculation is considered for a particular known tension, T_n, at the point in question.

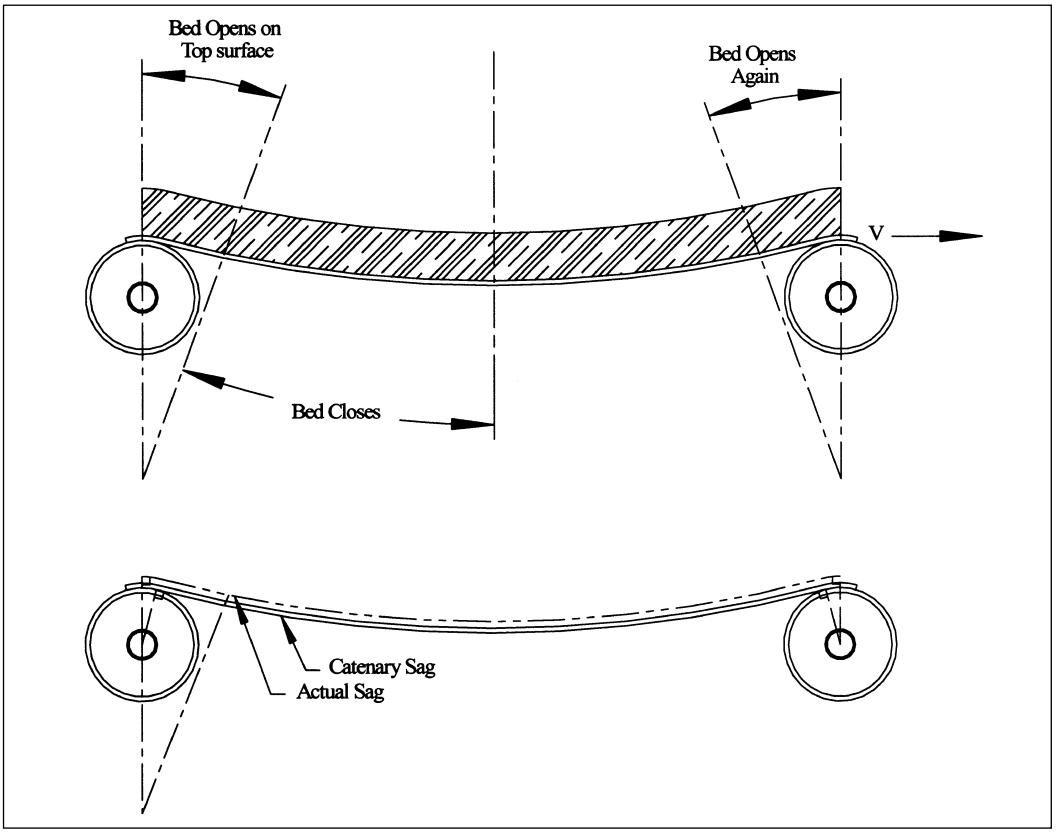

Figure 6.42
Material deformation caused by belt sag

Belt Tension Calculations for All Conveyors: Universal Method *Cont.*

Material Trampling Loss

The belt sag causes the individual particles of bulk material to repeatedly move against each other as they progress from one idler to the next, with consequent energy loss due to internal friction. Energy must be added through the material depth to overcome the internal friction forces as the material closes on itself between an idler and the point of maximum sag at the center of the idler spacing. A portion of this energy is recovered as the bed depth opens up again in the section from mid span to the idler. Note that there is no net elevation change and therefore no potential energy change between idlers.

Therefore, the energy loss is influenced by bed depth, the belt sag, and the material strength. In the equations that follow bed depth is calculated as the maximum depth on the center roll per the load cross section geometry described in Chapter 4. The chart below provides a material friction parameter, C_{mz}, for the different material Flowability categories described in Chapter 3.

The amount and shape of the belt sag is primarily influenced by the material weight, the belt tension and the idler spacing, as in the catenary calculation, but also by the resistance to vertical deflection as the troughed belt supports the load similar to a beam with cross sectional stiffness. The calculation is further complicated since the belt does not act purely as a classic beam but also as a set of flat plates that are formed with the center roll and wing rolls. In the tension equations, the primary influences are incorporated in a basic calculation of the net work done on the material or energy loss. The unique influences of belt modulus and construction on the undulations in the vertical direction, z, along (x) and across (y) the belt for are incorporated with a correction ratio, R_{mz}.

In contrast to the previous 'friction' calculations with material loading where work is the result of a friction force acting through a distance, the following develops the work or energy loss directly since the load dependency is not simple.

$$\Delta T_{mzn} = \frac{W_{mzn} \times L_n}{S_{in}^2}$$

$$W_{mzn} = \frac{1}{12^4} \times d_m^3 \times \gamma_m \times C_{mz} \times BW \times \left[\exp\left[\left(W_b + W_m \right) \times \frac{S_{in}}{T_n} \right] - 1 \right] \times \exp\left[\frac{-1}{2} \times \left(W_b + W_m \right) \times \frac{S_{in}}{T_n} \right] \times R_{mz}$$

Figure 6.43
Tension to overcome internal movement of the bulk material

Where:

ΔT_{mzn} (lbf) = Tension loss in flight n from internal movements in the bulk material

W_{mzn} (ft-lbf) = Belt work required to cause material movement from one idler to the next

d_m (in) = Maximum material depth at center of belt, Reference Chapter 4

T_n (lbf) = Belt tension in flight n

γ_m (lbf/ft³) = Density of bulk material, Reference Chapter 3

C_{mz} = Net material friction loss factor per Table 6.45

R_{mz} = Correction between actual sag and catenary sag per Equation. 6.44

$$R_{mz} = \frac{1}{12} e^{\left[4.181 - 1.572 \times \left(\frac{BW}{S_{in} \times 12} \right)^{1.5} - 1.0827 \Delta y_{sn}^{0.5} \right]} \quad \text{For Troughed Fabric Carcass Belts}$$

$$R_{mz} = \frac{1}{12} e^{\left[4.966 - 4.071 \times \left(\frac{BW}{S_{in} \times 12} \right)^{.5} - \left(1.062 \times 10^{-2} \right) \Delta y_{sn}^{-1.0} \right]} \quad \text{For Troughed Steel Cable Belts}$$

$$R_{mz} = \frac{1}{12} \quad \text{For all Flat Belt Conveying}$$

Figure 6.44
Equations for R_{mz}

Belt Tension Calculations for All Conveyors: Universal Method *Cont.*

Where:

Δy_{sn} (%) = Average catenary belt sag for flight n as a percentage of the idler spacing:

$$\Delta y_{sn} = \frac{S_{in} \times (W_b + W_m)}{8 \times T_n} \times 100$$

The formulae for R_{mz} above applies for belt widths (BW) up to 96 inches and Idler Spacing (S_{in}) up to 10ft.

Table 6.45
Material friction loss factor

Flowability (Ref. Table 3.3)	Angle of Repose (deg)	C_{mz}
Very Free Flowing	0 to 19	1.5
Average Flowing	20 to 25	2.1
Average Flowing	26 to 29	2.5
Average Flowing	30 to 34	3.3
Average Flowing	35 to 39	4.2
Sluggish	40 to 45	5.7

R_{rmz} = 0.67 due to variability of the material and belt properties,

With T_5 = 19,500 lbf, the fabric carcass belt used in Case 2 yields the following example results:

Figure 6.46
Example correction factor calculation for belt sag

$$\Delta y_{sn} = \frac{S_{in} \times (W_b + W_m)}{8 \times T_n} \times 100 = 0.38\%$$

$$R_{mz} = 1.0e^{\left[4.181 - 1.572 \times \left(\frac{BW}{S_{in} \times 12}\right)^{1.5} - 0.10827 \Delta y_{sn}^{.5}\right]} = 13.49$$

Figure 6.47
Example calculation for the tension loss from material trampling using d_m formulae from Chapter 4

$$d_m = 8.86 \text{ in}$$

$$W_{mz5} = \frac{1}{12^5} \times d_m^3 \times \gamma_m \times C_{mz} \times BW \times \left[\exp\left[(W_b + W_m) \times \frac{S_{i5}}{T_5}\right] - 1\right] \times \exp\left[\frac{-1}{2} \times (W_b + W_m) \times \frac{S_{i5}}{T5}\right] \times R_{mz} = 16.6 \text{ ft} \times \text{lbf}$$

$$\Delta T_{mz5} = \frac{W_{mz5} \times L_5}{S_{i5}^2} = 414 \text{ lbf}$$

Liftoff Loss

Under conditions of high sag and high belt speed the bulk material can be launched slightly into the air landing back on the belt a slightly different angle than the sagged belt path. The effect is a small impact of the full material stream with consequent energy loss equal to this angular difference times the Kinetic Energy of the bulk material. In addition to energy loss, operation under this condition causes loss of control of the material as it splashes back onto the belt, additional idler loading from this lifting action, wear of the belt and material degradation. Various degrees of these effects can be expected at conditions nearing liftoff as the load redistributes in a reduced gravity field. In particular, dust can often be seen being exhausted from the expanding and collapsing material bed.

Belt Tension Calculations for All Conveyors: Universal Method *Cont.*

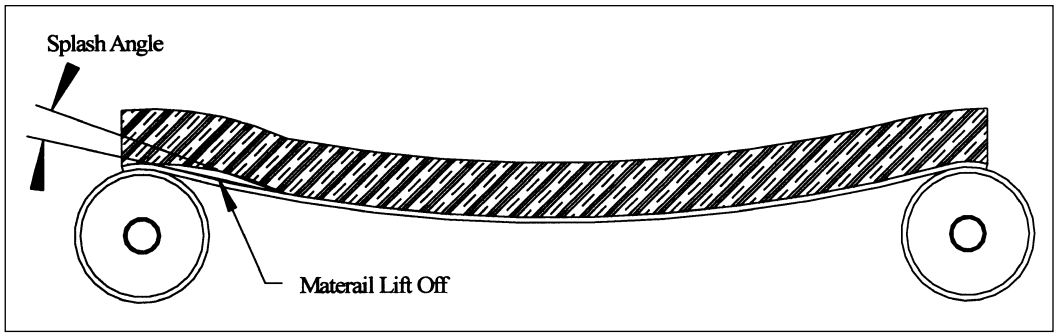

Figure 6.48
Material trajectory when $V > V_c$

A loss coefficient for this phenomena, K_{mz}, can be calculated by plotting the belt path and material trajectory. Since operating under this condition is not considered good standard practice, the following calculation instead provides the maximum belt speed that liftoff will not incur and are therefore the belt speeds which are within the scope of this chapter:

Figure 6.49
Critical belt speed for applicability of ΔT calculations

$$V_{cn} = \frac{5}{\left(-2\times c_{ln} + c_{1n}\times S_{in}\times 12\times c_{3n}\right)} \times \left[c_{1n}\left(-2+S_{in}\times 12\times c_{3n}\right)\times g\times 12\right]^{0.5}$$

Where:

V_c (ft/min) = The critical maximum belt speed without causing material liftoff

c_{1n}, c_{1in}, and c_{3n} = Functions in Equation 6.49

g = 32.2 ft/sec²

Figure 6.50
c_{1in} Equation

$$c_{1in} = \frac{W_m + W_b}{8 \times T_m \times 0.371 \times 12}$$

Tm / BW

Figure 6.51
Equations for c_{1n} and c_{3n} for fabric belts

$$C_{1n} = \frac{1}{233.67 + \frac{0.255}{c_{1in}} + \frac{64.3745}{\left(\frac{BW}{S_{in}\times 12}\right)^2}}$$

$$C_{3n} = 1.8123 - 0.004476\left(E_b\right)^{0.5} - \frac{558.3}{\left(E_b\right)^{1.5}}$$

Figure 6.52
Equations for c_{1n} and c_{3n} for steel cable belts

$$c_{1n} = 0.000119 - \frac{1.953\times 10^{-13}}{c_{1in}^2} + \frac{0.1127}{\frac{T_n}{BW}}$$

$$c_{3n} = 0.122 - 0.0000104 \times \frac{T_{mn}}{BW} + 0.06 \times \frac{BW}{S_{in}\times 12}$$

Where:

d_m (in) = Maximum material depth at center of belt

T_{mn} (lbf) = Minimum tension in flight 'n'

E_b (lbf/in) = Longitudinal Belt Modulus

Belt Tension Calculations for All Conveyors: Universal Method *Cont.*

Belt speeds slightly higher than those calculated for V_{cn} have only minor penalties of power and abrasion. When dusting is a concern, speeds lower than those calculated allow the material stream to open up and expel fines as it collapses downstream of each idler. The situation will dictate the desired limit to operating belt speed but, in general, it should be within +/- 10% of V_{cn}.

Case 2 results in the following for Flight 2. Note that, with close idler spacing in Flight 1 and equal spacing along the rest of the conveyor, it is clear that V_{c2} will be the lowest since its tension is the lowest.

$$W_m = 138.9 \text{ lbf/ft}$$

$$W_b = 11.4 \text{ lbf/ft}$$

$$T_{m2} = 15{,}000 \text{ lbf}$$

$$E_b = 62{,}000 \text{ lbf/in}$$

$$c_{1i2} = \frac{W_m + W_b}{8 \times T_m \times 0.371 \times 12} = 2.8\times10^{-4}$$

$$c_{12} = \frac{1}{233.67 + \dfrac{0.255}{c_{1in}} + \dfrac{64.3745}{\left(\dfrac{BW}{S_{in} \times 12}\right)^2}} = 8.3\times10^{-4}$$

$$c_{32} = 1.8123 - 0.004476\left(E_b\right)^{0.5} - \frac{558.3}{\left(E_b\right)^{1.5}} = 0.698$$

$$V_{cn} = \frac{5}{\left(-2 \times c_{ln} + c_1 \times S_{in} \times 12 \times c_{3n}\right)} \times \left[c_{1n}\left(-2 + S_{in} \times 12 \times c_{3n}\right) \times g \times 12\right]^{0.5} = 607 \text{ ft/min}$$

Figure 6.53
Example calculation for minimum lift off belt velocity

Since V = 600 ft/min < V_c liftoff is not expected and therefore no additional power loss is expected due to liftoff.

POINT SOURCES OF TENSION

Like acceleration contributions discussed above, the following tension contributions to the belt can be looked at a step changes in tension even though the actual tension is changed over a small finite length. This category of tension effects is primarily associated with various mechanical components both as tension losses and tension adders. The latter, passive energy consumers similar to those addressed immediately above, are discussed first for the sake of continuity, though active tension contributions are more important in the general scope of conveyor design.

Pulleys are primary sources of point changes in tension and are often considered as separate flights in series with the conveyance and return flights. When used so, the other sources of resistance for this flight are set to zero. The remaining resistances described below are added to the other energy and main resistances calculations.

Pulleys as Passive Point Losses

Pulleys have a passive loss element that should be added independently of their role as sources of active tension change. These are due to belt slip and bending as well as from pulley bearing rotating resistance. The resistance of the belt to flexure over the pulleys is a function of the pulley diameter and the belt stiffness. The belt stiffness depends upon the ambient temperature and the belt construction but is appropriately simplified below. The resistance of the pulley to rotate is a function of pillow block bearing friction, lubricant, and seal friction. The pillow-block bearing friction depends upon the load on the bearings, but the lubricant and seal frictions generally are independent of load. Since the drive pulley bearing friction does not affect belt tension, it's contribution should not add to belt tension but should be included when determining the active torques required of the motors, brakes etc; Detailed equations are as follows;

Tension Management *Cont.*

Table 6.62
Table of common wrap factors, C_w (rubber belt covers)

Type of Drive Pulley	θ Wrap (deg)	Automatic Takeup		Manual Takeup	
		Bare Pulley	Lagged Pulley	Bare Pulley	Lagged Pulley
Single, no Snub	180	0.84	0.50	1.20	0.80
Single with Snub	200	0.72	0.42	1.00	0.70
	210	0.66	0.38	1.00	0.70
	220	0.62	0.35	0.90	0.60

1. For wet belts and smooth lagging use bare pulley factors.
2. For wet belts and grooved lagging use lagged pulley factors.
3. If wrap is unknown assume the following: Single no Snub = 180°, Single with Snub = 210°.

Multiple pulley drives are discussed under Belt Stretch Interactions.

Belt Sag between Idlers

Chapter 5, "Belt Conveyor Idlers," presents the basic facts on the subject of idler spacing. A major requirement, noted in Chapter 5, is that the sag of the belt between idlers must be limited to avoid spillage of conveyed material over the edges of the belt. The sag between idlers is closely related to the weight of the belt and material, the idler spacing, and the tension in the belt and the latter two must be balanced to the following limits to provide reliable conveyance.

The basic sag formula for a pure catenary can be expressed as a relation of belt tension, T_n, idler spacing, S_{in}, and the weight per foot of belt and load, $(W_b + W_m)$, in the form:

Figure 6.63
Catenary sag in conveyor terms

$$\Delta Y_s = \frac{W \times S_i}{8.0 \times T_{mn}}$$

Figure 6.64
Sag design equations

$$\Delta Y_{sn} = \frac{(W_b + W_m) \times S_{in}}{8 \times T_n}$$

$$\Delta y_{sn} = \frac{(W_b + W_m) \times S_{in}}{8 \times T_n} \times 100$$

Where:

ΔY_s (ft) = Vertical drop between idlers for flight n
Δy_s (%) = Vertical drop between idlers for flight n as a % of the idler spacing
W_b (lbf/ft) = Belt weight per foot of length
W_m (lbf/ft) = Material weight per foot of length
T_{mn} (lbf) = Minimum Belt tension in flight n
S_{in} (ft) = Idler spacing in flight 'n'

Experience has shown that when a conveyor belt sags more than 3 percent of the span between idlers, load spillage likely results. Lower sags are needed with faster belts as discussed above in the section on main resistances. The pure catenary equations are used though the actual sag deviates from this calculation as used in the ΔT_{mz} calculation because the accuracy of this rule of thumb does not justify the added precision. The allowable percent sag has evolved from experience and has proven to prevent spillage and material departing the conveying trough for most operating conditions. Reformatting the catenary equation for the minimum allowable tension at various percentages of belt sag yields a convenient design formula:

Figure 6.65
Minimum tension as a function of sag percentage

$$T_{mn} = 12.5 \times S_{in} \times \frac{(W_b + W_m)}{\Delta y_s}$$

Where:

T_{mn} (lbf) = Minimum tension to meet sag percentage rule

Tension Management *Cont.*

calculation for dimensional integrity. The speed at the distance K versus the speed of the belt is then used to adjust the Equivalent Weight of the component to that of the belt so that they can be summed to arrive at an effective contribution to the total weight or mass of the conveyor acting as a rigid body at the belt speed.

If WK^2 is known for the rotating conveyor components, the Equivalent Weight of these components, at the belt line, can be found. Values of WK^2 (expressed in $lbf\text{-}ft^2$), which are difficult to compute, except for very simple shapes, must be estimated from the summation of simple shapes or obtained for each component from the manufacturers of the conveyor components, motors, transmission elements, etc.

$$W_{et} = W_{bt} + W_{mt} + \sum\left(W_r \times K_i^2 \times \left(\frac{2 \times \pi \times N_i}{V}\right)^2\right)$$

$$M = \frac{W_{et}}{g}$$

$$\Delta T_a = M_{et} \times a \quad \text{or} \quad a = \frac{\Delta T_a}{M_{et}}$$

$$\Delta V = a \times t \times 60$$

$$V_t = V - \Delta V$$

Figure 6.67
Inertial and acceleration calculations of a conveyor system

Where:

T_a (lbf)	= Accelerating or decelerating (-) force provided to the moving conveyor
M_{et} (slugs)	= Equivalent mass of moving parts of the conveyor and load
W_{et} (lbf)	= Total equivalent weight of moving parts of the conveyor and load
$W_r \times K_i^2(2\pi N_i/V)^2$ (lbf)	= equivalent translating weight of rotating part i
W_{bt} (lbf)	= Total weight of the belt=W_b*L_b
W_{mt} (lbf)	= Total weight of the bulk material on the belt=W_m*L_m
W_i (lbf)	= Weight of rotating component i, lbs
K_i (ft)	= Polar Moment of Inertia or effective radius of rotating component i, ft
N_i (rpm)	= Rotational speed of component i, rpm
L_b (ft)	= Total length of the belt, usually twice the conveyor length, or 2*L
L_m (ft)	= Total loaded length of the belt, varies between o and total conveyor length L
i	= Index for each individual rotating component including drive components (n for pulleys)
g (ft/sec^2)	= Acceleration of gravity = 32.2
a (ft/sec^2)	= Acceleration
V (fpm)	= Nominal belt velocity or velocity before time t
ΔV (fpm)	= Change in belt velocity during time interval t
V_t (fpm)	= Transient belt velocity after time t.
t (sec)	= Time interval being analyzed

Values of WK^2 (expressed in $lbf\text{-}ft^2$) are complicated to compute, except for very simple shapes, but can be estimated from the summation of simple shapes and their densities or from the manufacturers of the conveyor components, motors, transmission elements, etc.

Conveyor as a System *Cont.*

DIN f

A popular design method used in various parts of the world and referenced in various international standards including the International Standards Organization (ref ISO 5048-1989) and Deutsche Institut für Normung (ref DIN 22101) is used for design as well as for reference comparisons. This 'artificial friction factor' per ISO 5048-1989 is the change in belt tension per unit length divided by the combined weight of bulk material, belt and idler roll, again per unit length. When used as a tool for comparison, the total of the main resistances, that is, the sum of all ΔT_e's less the lift and point sources contributions, would be divided by the total moving weight including the live material weight, the belt around it's full path and idlers on both the carry and return sides. Though the various contributions to tension increase do not vary consistently with any or all of these weight contributions, this factor can effectively serve as a comparison tool especially when international standards are referenced in the specification.

Transport Efficientcy f_e

A more consistent and preferred parameter for comparision is to divide the total of the ΔT_e's less the point source and lift tensions divided by the conveying length, L, and W_m. Like the DIN f or Effective f, f_e is dimensionless but is preferred since it provides a more relevant and balanced comparison considering that belt weight and idler weights are design decisions rather than major tension influences. Both of these measurement idices will vary with changing belt and component design duty decisions due to the effect on subcomponents such as belt cover thickness, idler series and seal design, pulley weight. Nonetheless, f_e will change less since the weight of these components is not part of the calculation. As described in this paragraph f_e is explained as a simple way to compare conveyor design choices. The case where the belt is empty will result in an answer of infinity if the following definition of f_e is used but is not applicable because no material is being transported:

$$f_e = \frac{T_{e(total)} - T_{e(point)} - T_{e(lift)}}{L \times W_m}$$

Referring to definitions earlier in this chapter;

$$f_e = \sum \frac{\Delta T_{main}}{W_m}$$

where ΔT_{Main} is the sum of all $\Delta T_{Main\ n}$ for all flights n and W_m is the total weight of the material, belt and idler rollers.

SYSTEM INTERACTIONS

The belt interconnects the various components of a conveyor and therefore is critical to the way components work together.

Component Location

The location of primary components has a major effect on the required belt rating and stretch, or travel seen by a takeup, under steady running conditions and, often just as important, on the transient tensions that could develop without appropriate control. The location of tension controlling components often depends on issues of simplicity, clean side wrap, accessibility and cost. Judicious location of key tensioning components can have a significant benefit to belt life, takeup requirements and transient tensions as well as total invested cost. The following discusses general interactions that come into play but their importance varies widely and specific tension effects must be analyzed in detail for safe and optimum performance. Transient speed issues are elaborated on later in this section as well.

Active Pulleys

The general goal with conveyor design is to minimize the peak tension and total stretch. Peak tension will be located at the active pulleys since these provide corrective tension changes to those accumulating due to motion friction and gravity forces. Since belt stretch is the product of length, tension and modulus, less

Conveyor as a System *Cont.*

total stretch will be seen the closer the active pulley is to the flights with the primary conveying tension contribution. Key locations to consider are near the end of a long incline or high friction section or where the belt enters a long, net power producing decline flight.

Single pulley drives are the simplest and most common for shorter belts. The best locations for simple incline or horizontal belts are at or near the head while tail drive is good practice for overall regenerative decline conveyors.

Multiple Pulley Drives

A multiple-pulley drive uses two or more separate motors, one or more driving the primary drive pulley and one or more driving secondary drive pulleys. The primary drive is defined as the one to contact the belt first from the primary load resistance since it commonly has the higher tension. They are used for a number of reasons, including:

1. Reduction in T_m required.
2. Space and component size.
3. Commercial and maintenance benefits from multiple standardized components.
4. The first of these results primarily from the use of a smaller ΔT_e and is usually the most important.

With multiple pulley drives, each of the pulleys in the drive is looked at independently with its own wrap, θn, friction factor, f, and T_m. When each drive is supplied with a known torque relative to each other, the tensions can be added without additional concern. For other drives, this is not so straightforward. When torque is not actively controlled or is not an independent characteristic of a prime mover, a multiple pulley drive should be designed considering the interaction of the drive characteristics and the various components in the system as discussed later in this chapter. Drive coordination and control is an important element of multiple pulley drives. In particular, when T_m for pulley n is supplied by another drive pulley n'>n, then pulley n' must be started marginally sooner and both accelerated at rates appropriate to T_m needed by drive pulley n.

Breaking the total drive requirement into smaller multiples also allows benefits from judicious locations acknowledging penalties to installation and control simplicity. The use and location of multiple spaced drives likewise influences the tension levels and stretch so that less friction and gravity tension accumulates before it is adjusted to a lower magnitude by an active pulley. Indeed, continuous active tension compensating for natural tension additions, if practical, might be considered ideal. The optimum use of multiple drives occurs when the tension entering the various drive locations are equal.

Though drive spacing can have benefits by reducing peak tension, only several locations are ultimately available or beneficial. These are at the head, the tail and spaced along the carry section as booster drives. For the longest conveyors, multiple drive systems will often include a combination of clustered drives acting substantially as one at one end of the conveyor as well as additional drives at the other end and/or spaced along the carry side of the conveyor.

Clustered Drives

If properly designed the multiple pulley configuration is often considered as a single drive since they are close to one another and can be considered to act as one. In this case, the tensions exterior to a multiple-pulley drive are used the same as those for a single-pulley drive. Pulleys are still identified independently, however.

The C_w values provided for calculation of Minimum Tension also show the benefit of a longer wrap for reducing the T_2 required in a drive. This effect is extended with the longer effective arc from a pair or series of drive pulleys. In addition, the lowest tension pulley in the drive can be equipped with less power than its proportional share so that it requires even less Tm. The T_1 of this pulley acts as it's neighbors T_2 and, when properly sized, is sufficient for the higher power remaining for the other drive pulleys and can result in a significantly reduction of T_m for the entire drive so that the maximum belt tension is also less.

Conveyor as a System *Cont.*

Transient Behaviors

Transient tensions imply dynamic or changing tensions. The rate of change has a major effect on the consequences of transient tension. In particular, the potential energy stored as belt stretch or takeup weight elevation at a particular point on the conveyor has the potential to move quickly and be seen as tension change at a different point on the conveyor when the force balance in the belt changes. These changes can continue to propagate around the conveyor until dampened out. They can also interact with the takeup mass and cause it to oscillate. In other cases positive and negative tension waves can propagate in either direction until the meet and double up at a point at the opposite end of the conveyor. Whereas active increases in ΔT_e are more likely to be a self limiting action, sudden loss of ΔT_e is a common concern because it is a major, fast acting change that can occur from simply cutting or losing power to a drive especially during a start (aborted start) when the drive torque can be well above running torque. Particular transient operating conditions that should be avoided incwlude:

1. Direct-on-line starting of overpowered motors.
2. Overpowered drives with high locked rotor or starting torque and a low full speed torque.
3. Aborted starting with conveyors of short startup time.
4. Aborted startup of overloaded belt.
5. Emergency braking of high tonnage/high lift conveyors.
6. Severe braking on belts with downhill loading.
7. Overloading on downhill portions of downhill conveyors.
8. Short stopping times (drift time less than 5 seconds).
9. For starting or stopping time us a rule of start up time of 45 sec./mile of conveyor.

High sag can magnify problems from any of this list. In addition, high frequency of smaller occurrences of transient conditions also causes accumulative damage and should be avoided.

Tension change from speed and load increases and decreases cause a wide range of possible system consequences. They can be guarded against in the design or diagnosed and eliminated by proper understanding and corrective action including Dynamic Analysis, if necessary.

High Dynamic Tensions

When energy must be discharged from a conveyor system, the belt redistributes the forces to damping or loss locations at the tension wave speed of the belt. If done suddenly, the result can be high speed changes to high inertia components with potentially very high belt forces. These extreme dynamic tensions can be damaging to the belt, especially its splice, and to pulleys, drive components as well as idlers from vertical inertial forces that develop as sag is suddenly reduced. They are best treated by minimizing the possibility of occurrence through design modeling, by thorough conveyor control and by addressing the mass of the drive and it's capability for deceleration.

Festooning from Low Tensions

Without proper consideration of the starting and stopping forces, it is possible that belt tensions may drop to zero and the belt will experience extremely high sag or festoon in a buckling action between idlers at some point on the carry or return side of the belt. For example, a belt with a decline from the tail end, and an incline at the head, may be loaded at the tail end only. If braking is applied at the head pulley, the belt may have zero tension or even some slack on the carrying side. The potential result is load spillage, entanglement, loss of alignment, and impact or impulse forces that redevelop in the conveyor system as the 'slack' is reabsorbed.

Effect on Material Carried

In certain instances, the rate of starting and stopping may exert influences on the material which result in intolerable conditions. Certain materials can be accelerated or decelerated more effectively by the belt than others. For example, if a declined belt conveyor handling palletized iron ore is stopped too rapidly,

Conveyor as a System *Cont.*

the material may start to roll on the belt surface and result in a pile-up at the discharge point. Similarly, starting an inclined belt too rapidly may cause the material to roll backward. Especially in combination with high sag, tension pulses can cause the material to be thrown from the conveyor.

Belt Stretch Potential Energy

The potential energy that is stored in belt stretch can be a significant portion of the total energy stored in a tensioned, moving belt especially for slow, high lift, fabric belt applications. Much of this is due to the takeup tension in each strand of the belt and the balance is re-supplied to the conveyor movement and material lift during stopping. In these cases the energy need to lift the material during run on conditions is dominant so that this effect is actually beneficial to a more gradual stopping time.

Stored Potential Energy from several sources can be contained easily in the conveyor system and is usually not a critical element of design. Its magnitude may significant and should be respected for the damage and safety hazard to humans and equipment if, during operations or maintenance, this energy were released by blockage removal, catastrophic belt, pulley or structural failure.

Drive or Brake Slip

During both acceleration and deceleration there exists the distinct possibility of losing the required T_m or T_1 /T_2 ratio necessary to maintain the required traction between the belt and active pulley. This particularly is true if the takeup is located far from the drive. If a screw takeup is used and improperly adjusted or the travel of a gravity takeup is too limited, the necessary ratio T_1 /T_2 may be lost during the attempt to accelerate the belt conveyor. During deceleration, the effect of the inertia load may cause a loss of the T_1 /T_2 ratio necessary to transmit braking forces from the braking pulley to the belt. This would permit the continued motion of the belt and load, after the pulley had been stopped.

Unexpected Failures

The nature of many of the effects of Transient tension is that they cannot be explained by the conventional calculations of this book. Because of speed and infrequency, they are also difficult to observe. Nonetheless, there is an explanation not necessarily associated with poor component design or manufacture. Common problems on existing conveyors often identified by Dynamic Analysis:

1. Premature belt splice failures.
2. Belt breaks other than at splices.
3. Repetitive pulley failures.
4. Excessive take-up travel.
5. Take-up component failures (ropes, sheaves, etc).
6. Drive or brake slip.
7. Concave vertical curve liftoff during starting or stopping.
8. Brake failures.
9. Material thrown from the belt.

Belt Flap

Belt flap is a dynamic vibration in the carry or return belt that is usually initiated by idler run out but is magnified because the geometry, loading and speed are near a critical combination defining the natural frequency of this movement. In some cases, especially in flat return belts, this behavior can be predicted accurately as a vibrating string. In general, the problem is more complicated than that but can be estimated using this equation:

$$S_{ic} = \frac{24{,}800 \times m^2 \times d_i^2}{V^2 \times \Delta y_s}$$

Figure 6.82
Critical idler spacing sensitive to belt flap

Example Conveyor Analysis

Case 3 Description

For demonstration purposes a conveyor will be designed using the Universal Method for the path as shown in Figure 6.83. The material is a free flowing crushed rock screened to 4 inch minus with 90% fines. It has a bulk density of; 90 lbf/ft^3, an angle of repose of 33°, a surcharge angle of 20° and a fairly wide range of expected moisture content. The CEMA material code would be considered D36.

1. Design capacity is 2,500 tph.
2. The path length is 3,500 ft.
3. The conveyor profile includes elevation changes at 10° degrees both uphill and downhill so that 'vertical' curves will be needed. In addition, a 10° degree change in path is needed near the loading point so a horizontal curve must be incorporated so that a separate conveyor and transfer point is not needed. Details of the initial conveyance path are provided in Table 6.84.
4. Space for a gravity takeup exists near the loading point so this is considered the preferred takeup location.
5. Material spillage concerns are moderate. A maximum belt sag of 1-1/2% will be used for the design.
6. Ambient operating temperature is 15°F except for declines, when loaded, where 100°F was used. The higher temperature was used for braking/regeneration scenarios.
7. Because the horizontal curve flight has no elevation change it will not affect the power engineering and is analyzed separately as described in Chapter 9.
8. The belt covers for Case 3 are 3/8 inch by 3/8 inch.

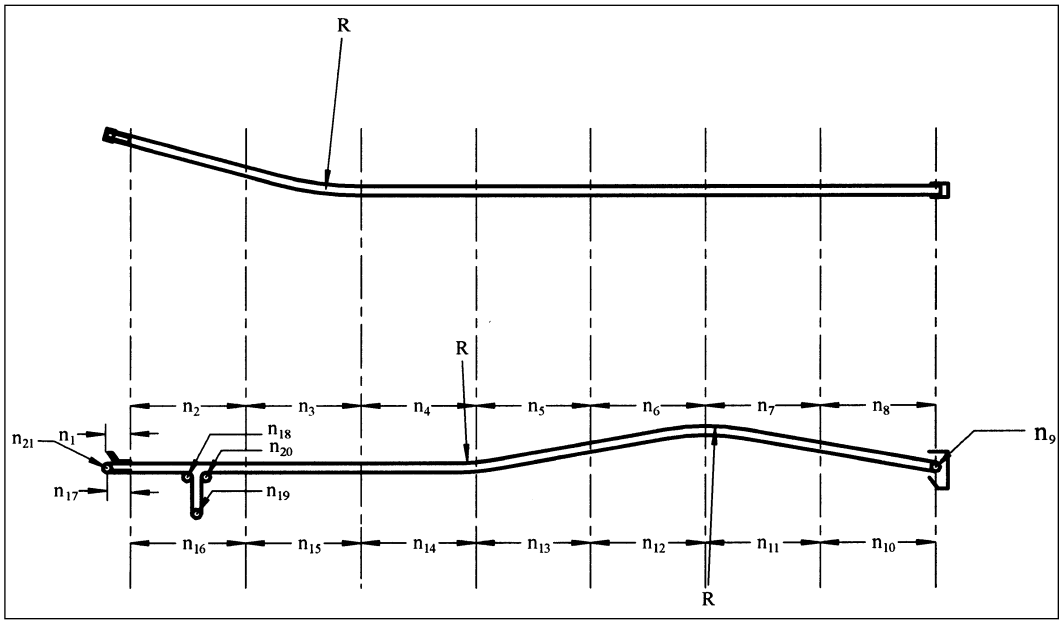

Figure 6.83
Case 3 conveyor path

Initial Considerations

Belt Width

Per Chapter 4, the minimum belt width for this material should be 6 times the lump size or 24 in. Since the belt will occasionally see a full load of lumps, the preferred minimum is 10 times the lump size or 40 in. Additional belt width issues are part of capacity which interacts directly with speed.

Belt Speed

Initially, without regard for capacity, Table 4.2 indicates that a heavy hard, sharp edged ore, coarse crushed stone material should be conveyed at a maximum belt speed of 800 fpm for belt widths of 42 to 60 inch.

Conveyor Belt Covers: Characteristics, Composition and Design *Cont.*

Manufacturer's Brand

It is common practice to imprint the belt cover with the identity of the manufacturer and the type of belt. If cleaning of the conveyor belt is a critical issue or the belt is very long then the brand should be placed on the bottom cover to prevent fines from accumulating in the brand and subsequently falling from the belt.

RMA Grade I

Will consist of natural or synthetic rubber or blends which will be characterized by high cut, gouge, and tear resistance and very good to excellent abrasion resistance. These covers are recommended for service involving sharp and abrasive materials, and for severe impact loading conditions.

RMA Grade II

The elastomeric composition will be similar to that of Grade I with good to excellent abrasion resistance in applications involving the conveyance of abrasive materials, but may not provide the degree of cut and gouge resistance of Grade I covers.

When covers are tested in accordance with ASTM D412, the tensile strength and elongation at break shall comply with the requirements of Table 7.2, for the grade of cover, as appropriate.

Table 7.2 *Properties of rubber covers*

Grade	Minimum Tensile Strength (psi)	Minimum Tensile Strength (Mpa)	Minimum Elongation @ Break (%)
I	2500	17	400
II	2000	14	400

The tensile strength and elongation at break values are not always sufficient in themselves to determine the suitability of the belt cover for a particular service. The values in the above table should only be specified for conveyors or materials with a known history of performance and where it is known that compliance with the value will not adversely affect other in-service properties.

COVER AND PLY ADHESION

When belting is tested in accordance with ASTM D378, the adhesion for covers and between adjacent plies should not be less than the values given in Table 7.3.

Table 7.3 *General purpose rubber cover and ply adhesion*

Adhesion Between Adjacent Plies		Adhesion Between Cover and Ply			
		1/32" ≤ Cover Thickness ≤ 1/16" (0.8 mm)	(1.6 mm)	Covers greater than 1/16" (1.6 mm)	
25 lbs/in	4 KN/m	16 lbs/in	3 KN/m	25 lbs/in	4.4 KN/m

SPECIAL PURPOSE BELTING

Special purpose belting and its components (covers) are just that: those that require special characteristics and properties. Conveyor applications and systems that operate outside the normal parameters covered under general purposes will include high temperatures (above 175° F/80° C), low temperatures, (below 40°F/5°C), fire/flame resistance, oil exposure, food ("FDA") processing, and chemical resistance. Conveyor belt manufacturers provide products to meet these and other demands with a wide variety of elastomers and carcass constructions. The following list of conveyor cover compound types is not all inclusive, but is a general guide for special applications:

Hot Materials Handling

Cover compounds consisting of butyl (and bromo/chloro butyl) or EPDM can resist the degrading effects of high temperatures up to approximately 400°F/200°C. Some specially formulated SBR-based compounds will perform in high temperature environments but not generally to the same range or degree as EPDM or butyl-based covers. Neoprene (polychlorprene) and Hypalon (chloro-sulfonated

Conveyor Belt Covers: Characteristics, Composition and Design *Cont.*

polyethylene) based compounds also exhibit good heat aging properties. Belting with silicone or Viton (fluorocarbon polymers) covers will withstand very high temperatures best, with extended operating range up to approximately 700°F.

Polyester and nylon fibers/textiles will melt at temperatures above 500°F/260°C. Loss of dimensional stability and softening will occur well before this temperature is reached. Glass fiber carcasses are often recommended where operating temperatures exceed 400°F/200°C.

Oil Resistant Belting

Belt covers designed to resist swelling and degradation in oily environments will often incorporate Nitrile based polymer, polyvinyl chloride (PVC), or urethane. The type of oil encountered as well as the temperatures in which the belt must operate is of prime importance. Highly aromatic and asphaltene-based materials, as well as exposure to diesel fuel, are best handled with a Nitrile or urethane based compound. PVC belting will resist light oil (e. g., mineral and napthenic oils) degradation at lower temperatures. Neoprene/polychloroprene compounds will also resist low aromatic oils and fuels satisfactorily.

Food Processing

Food processing entails belt exposure to both vegetable oil and animal fats. In such environments, PVC and nitrite-based belt constructions predominate. Both have good resistance to swelling and degradation under these conditions.

Fire/Flame Resistance

Belting requiring flame resistance is engineered to meet underground mining regulations and specifications. Currently, belt and belt compounds using SBR, nitrite, polychloroprene (neoprene) and PVC are routinely utilized. Cover compounds are designed to meet specific national or international standards. These standards typically define laboratory tests which either demonstrate that the belt is able to self extinguish after being set on fire (Bunsen burner or gallery tests), or which establish that the belt will not initiate a fire from the heat generated when the belt is stalled against a rotating steel drum, (drum friction test). The latter simulates a potential mine condition where a belt is stalled against a rotating drive pulley.

Low Temperature Environments

Generally, most general purpose (Grades I and II) belting and compounds will resist stiffening down to -40°F/°C. For most general purpose belting, when there are prolonged periods of downtime during which the belt is exposed to -40° for several days or weeks, hard starts may be difficult or deleterious to the belt because of coldset. When these conditions are expected, belts can be obtained which have suitable low temperature plasticizers and low glass-transition polymers or blends incorporated to permit maximum flexibility and operation.

Chemical Exposure

Conveyor belting manufacturers should be consulted when systems are being operated in specific chemical environments. The condition in which the conveyor belt is operating should be clearly defined. Consideration of the chemical concentration and temperature, as well as the possible presence of incidental processing chemicals or oils should also be taken into account.

COVER CONSIDERATIONS

The covers should be of sufficient thickness and quality to protect the carcass. Covers for general service applications are listed in Tables 7.5 and 7.6, which list suggested minimum thickness for carrying and pulley side covers, respectively.

Conveyor Belt Covers: Characteristics, Composition and Design *Cont.*

Table 7.4
Conveyor belt cover quality selection

Cover Grade	Major Advantages			General Applications
GENERAL SERVICE				
Grade I	Excellent	Excellent	Not Recommended	Large size ore, sharp cutting materials. For extremely rugged service.
Grade II	Good	Good to Excellent	Not Recommended	Sized materials with limited cutting action, primarily abrasion. For heavy duty service.
OIL AND CHEMICAL SERVICE				
Cholroprene (Neoprene oil resistant)	Good	Very Good	Very good for petroleum oils. Fair for vegetable and animal oils.	Heavily oil sprayed coal (petroleum oil up to 20% aromatics, No. 2 diesel fuel). Any material treated with or containing large amounts of petroleum oil.
Buna N (Nitrile oil resistant)	Good	Good	Very good for petroleum, vegetable and animal oils.	Oily grain or seed service (soy-beans, crushed corn, etc.). Food handling. Greasy, oil sprayed coal, (petroleum oil up to 40% aromatics, No. 2 heating oil).
Medium oil resistant	Good	Good	Limited for petroleum, vegetable and animal oils.	Lightly sprayed coal, mildly oily grains and feeds, wood chips and phosphates.

The cover gauge required for a specific belt is a function of the material conveyed and the handling methods used. Increased cover thickness is required as the following conditions become more severe: material abrasiveness, maximum material lump size, material weight, height of material drop onto the belt, loading angle, belt speed, and frequency of loading as determined by the frequency factor.

Table 7.5
Suggested minimum carry thickness for normal conditions: RMA Grade II Belting

Class of Material	Examples	Thickness (in) *
Package Handling	**Cartons, Food Products**	**Friction to 1/32**
Light or Fine , Nonabrasive	Wood Chips, Pulp, Grain, Bituminous Coal, Potash Ore	1/16 to 1/8
Fine and Abrasive	Sharp Sand, Clinker	1/8 to 3/16
Heavy, Crushed to 3 inches (76 mm)	Sand and Gravel, Crushed Stone	1/8 to 3/16
Heavy, Crushed to 8 inches (203 mm)	Run of Mine Coal, Rock Ores	3/16 to 1/4
Heavy, Large Lumps	Hard Ores, Slag	1/4 to 5/16

** Cover thicknesses are nominal values subject to manufacturers' tolerances.*

Table 7.6
Suggested minimum pulley cover thickness: RMA Grade II Belting

Operating Conditions	Thickness (in) *
Non-abrasive Materials	1/32
Abrasive Materials	1/16
Impact Loading **	3/32

** Cover thicknesses are nominal values subject to manufacturers' tolerances.*

*** While increased cover gauge helps protect the carcass, if impact is severe, a correct system design that includes carcass design, top cover thickness, and impact-absorbing belt support in the conveyor loading zone is the preferred method of handling.*

DETERIORATING CONDITIONS

Table 7.7 establishes the basis for determining cover quality for conditions which attack or cause deterioration in the belt. The actual cover thickness generally should follow the guidelines for a Grade II cover in Table 7.5. For all special materials not listed, or where extreme concentrations of chemical solutions are likely to be encountered, a belt manufacturer should be consulted to determine appropriate cover quality and thickness.

Conveyor Belt Covers: Characteristics, Composition and Design *Cont.*

Table 7.7
Deteriorating conditions for conveyor belt covers

Typical Materials Handled With out Cover Deterioration	
Chemicals	Materials wetted with or containing the following chemicals and not over 150° F may be handled satisfactorily on conveyor belts with covers of Grades I and II: Black Sulfate liquor Ethyl Alcohol Sulfur, elemental, dry Sulfuric acid (dilute)
Heat	Hot fine material up to 150° F/65° C Hot lump material up to 150° F/65° C
Fertilizers	Super phosphates Triple super phosphate Phosphate rock or pebbled, acid treated, to produce super or triple super phosphate

With loading conditions resulting in maximum cover wear, the top cover thickness may have to be increased by 1/16 to 3/16 inches above the values listed in table 7.5 in order to obtain a reasonable life.

MATERIALS HANDLED RESULTING IN DETERIORATION OF COVERS

Chemicals not listed *may* have a deteriorating effect on the rubber covers of conveyor belting, but, because of considerations of concentration and temperature, do not lend themselves readily to classification. Therefore, when handling chemicals not listed in Table 7.7, consult the belt manufacturer for cover quality recommendations. Chemicals such as dust suppressants, fuel additives and waste fuels blended with the bulk solid may affect the belt and result in cover deterioration or belt cupping.

MOLDED COVERS

For special applications and/or unusual operating conditions, covers with special molded surfaces may be used to advantage. One type has a rough top, or various patterns of molded surface designed primarily for conveying packages up inclines, but is also occasionally used for conveying light-weight bulk materials on steep inclines. The second type is a ribbed or cleated cover used in bulk conveying to allow the conveyor incline to be increased without backsliding the load. Also, special designs for handling wet materials or slurries permit drainage or retention of fluids as required.

FREQUENCY FACTOR

The frequency factor indicates the number of minutes for the belt to make one complete turn or revolution. It can be determined using the following formula:

Figure 7.8

$$F_f = \frac{2L}{V}$$

Where:
L (ft) = Center-to-center length of the belt conveyor
V (fpm) = Belt speed
F_f (min) = Frequency factor

Loading Considerations

For a frequency factor of 4.0 or over, minimum top cover thicknesses can be considered based on the loading conditions. For a frequency factor of 0.2, the appropriate top cover thickness should be increased up to twice this minimum amount. For frequency factors between 0.2 and 4.0 increase the top cover thickness accordingly.

LOADING CONDITIONS RESULTING IN NORMAL COVER WEAR

1. Material feed is in the same direction as belt travel. See Chapter 12, "Loading the Belt."
2. Equivalent free fall of material onto the conveyor belt is not over 4 feet. See Tables 7.29 and 7.31.
3. Loading area of the belt conveyor is horizontal or has a slope of not more than 8 degrees.
4. Properly designed chutes and skirtboards to form, center, and settle the load on the belt. See Chapter 12, "Loading Chutes and Skirtboards."

The Belt Carcass *Cont.*

reduced multi-ply polyester and nylon belting with standard fabric offerings in pounds per inch width (PIW) tension ratings in multiples of 75, 110, 150, and 200 for standard "rubber" belting. New high strength fabrics such as triple warp and double face weaves achieve up to 450 PIW strength.

Straight warp fabric/carcass designs have also been available since the early 1980s which carry the concept of reduced-ply and lighter belting further. Straight warp carcass designs generally have high impact and tear resistance so they are often used in demanding applications. PVC belting often utilizes a solid or interwoven carcass for higher tension, heavy-duty conveyor systems. Ultra-high tension conveyors will require the use of steel cord/cable belts and, more recently, Aramid-based carcass design. Lightweight belting of rubber, PVC, or urethane will generally have a woven, interwoven carcass of spun or filament polyester as well as standard cotton fabrics and blends.

Detailed descriptions of these fabrics and carcass designs are listed below as textile reinforcements.

Table 7.11
Some materials used in belting reinforcement (belt carcass)

Common Name	Composition	General Comments
Cotton	Natural Cellulose	Only natural fiber used to any great extent for belting. High moisture absorption. Susceptible to mildew attack and loss of strength.
Fiber Glass	Fiber Glass	Low strength, Very low elongation. Used in high temperature applications.
Kevlar*	Aramid	Very low elongation and very high strength. Does not melt but does decompose at high temperatures.
Nomex*	Aramid	Very high strength and high elongation. Excellent high-temperature properties.
Nylon	Polyamide	High strength and high elongation, with good resistance to abrasion, fatigue and impact. Moderate moisture absorption. High resistance to mildew.
Polyester	Polyester	High strength, low elongation. Good abrasion and fatigue resistance. Low moisture absorption. Excellent resistance to mildew.
Steel Cord	Steel	Very high strength, very low elongation. Superior troughing characteristics. Excellent heat resistance. Good fatigue and abrasion resistance.

** Kevlar and Nomex are registered trademarks of du Pont de Nemours and Company*

TEXTILE REINFORCEMENTS

Textile fabrics are the most commonly used materials for reinforcing plies in conveyor and elevator belting. Textile fabrics are also used for conveyor belt "breakers" plies. Fabric properties are governed by the yarn material and size and by the fabric construction and weave. Standard heavy duty multi-ply belt fabrics are dip-treated with an Rescorcinol-Formaldehyde-Latex (RFL) coating to provide adequate adhesion with rubber compounds. These fabrics are woven (usually at right angles) of warp yarns, which run lengthwise, and filling (weft) yarns, which run crosswise.

Non-woven Fabric

A mat of fibers bonded together chemically and/or needle-punched to provide strength and flexibility.

Woven Fabric

The most common, and least complicated, fabric pattern used for flat belts is the plain weave shown in Figure 7.12. In this construction the warp and filling yarns cross each other alternately. A belt with two or more of these layers of fabric is known as a multi-ply belt. Other common constructions used to a lesser degree include broken twill (Figure 7.13); basket /Oxford weave (Figure 7.14); and Leno weave (Figure 7.15), which has an open mesh and is usually used as a breaker fabric.

Woven Cord is composed of strong warp yarns with very fine filling yarns used to hold the warp yarns in position. Solid woven (Figure 7.16) consists of interwoven multiple layers of warp and filling yarns.

The Belt Carcass *Cont.*

Steel Reinforcements

Steel Cord Steel cord is used as reinforcement in belting where it is better able to satisfy the requirements of the service conditions. Steel cord is used to obtain high strength, excellent length stability, low bending stresses and, in some cases, to provide superior troughing characteristics. The wires or filaments used in conveyor belt steel cords are usually made of high carbon steel and have a surface finish which facilitates adhesion to the surrounding rubber and reduces corrosion during use.

STEEL CORD CARCASS

Steel cord conveyor belts are made with a single layer of parallel, uniformly tensioned steel cords serving as the load bearing member. The cords are completely embedded in elastomeric compound, as shown in Figure 7.18. Steel cord belting is made in two construction types.

1. All gum compound construction with steel cords and elastomeric compound only.
2. Fabric reinforced construction with one or more plies of rubberized fabric above and/or below the steel cords and separated from the cords by the elastomeric compound. This construction is only used in special high impact service applications.

Both types have molded edges. Steel cord belts have covers of elastomeric compounds selected for the expected service conditions.

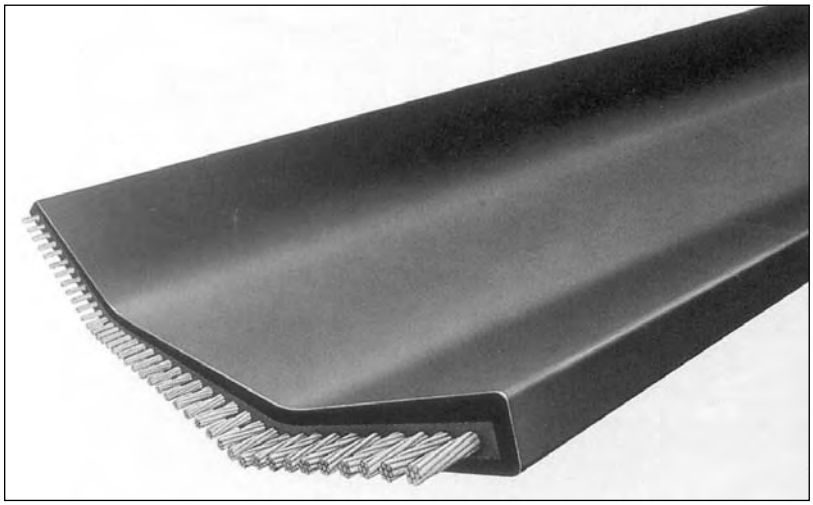

Figure 7.18
All-Gum Steel Cord Belt

Other Wire Components

Several other forms of wire are used in belting for special purposes such as rip resistance and transverse stiffness. A variety of wire structures is used, some of which include (1) pierce tape, (2) flat wire braid, (3) tire tread wire, and (4) wire tire cord.

Belt Splices

Conveyor belting is made endless, usually at the job site, by the use of either mechanical fasteners or vulcanized splices. Figure 7.19 illustrates a vulcanized fabric belt splice and Figure 7.20 illustrates a steel-cord belt splice. The vulcanized-splice method provides a stronger connection and longer service life. However, in many cases a mechanical fastener splice is acceptable, and in certain cases it actually may be preferred. Some of the advantages and disadvantages of vulcanized versus mechanically-fastened splices are described later in the chapter. For high-tension fabric belts with heavy gauge fabrics and for belts with aramid cords a so-called finger splice is used instead of a standard ply splice. In the finger splice mating triangular fingers are cut into the carcass of the belt ends to be joined. The fingers improve the flexibility of the splice by breaking up the joint line into many small sections. A breaker fabric is used over the fingered section to help distribute the tension transfer from one belt end to the other.

Belt and System Considerations *Cont.*

Distance is important in the change (transition) from troughed to flat form. This is especially significant when deeply troughed idlers are used. Depending on the transition distance, one, two, or more transition type troughing idlers can be used to support the belt between the last standard troughing idler and the terminal pulley. These idlers can be positioned either at a fixed angle or at an adjustable concentrating angle. In no case should the load rating of the idler be exceeded.

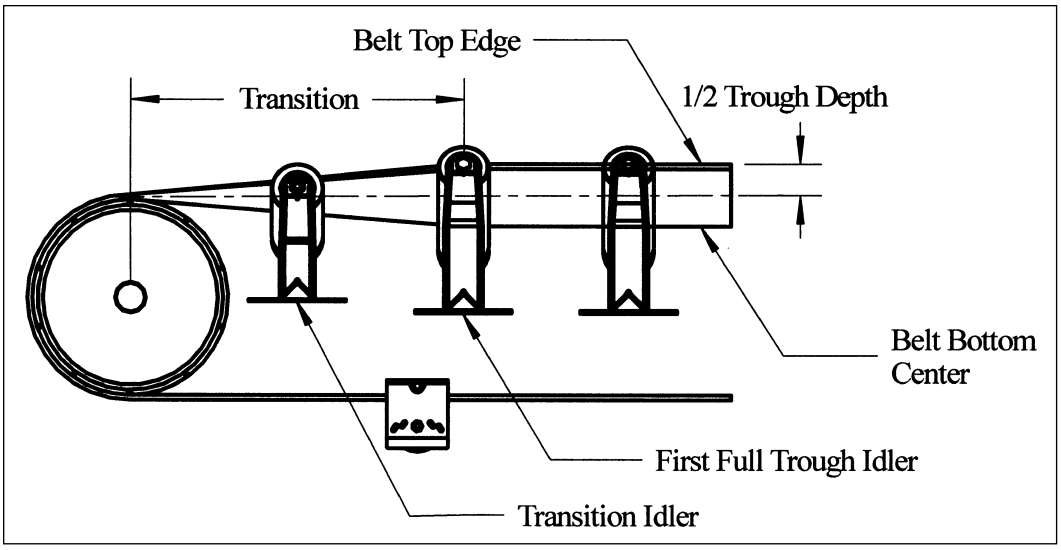

Figure 7.25
Half trough transition from terminal pulley to full trough angle

Table 7.26
Half trough recommended minimum transition distance

Idler Trough Angle	% Rated Belt Tension	Recommended Transition Distance = Factor x Belt Width (BW)	
		Fabric Belts	Steel Cord Belts
20°	> 90%	0.9	2.0
	60% to 90%	0.8	1.6
	< 60%	0.6	1.0
35°	> 90%	1.6	3.4
	60% to 90%	1.3	2.6
	< 60%	1.0	1.8
45°	> 90%	2.0	4.0
	60% to 90%	1.6	3.2
	< 60%	1.3	2.3

CEMA Recommendation

- Always use metal rollers for transition idlers.
- Always start the loading of the belt after the first fully troughed idler and never in the transition zone.
- Check the edge tensions in the transition zone to avoid belt buckling.
- The full trough transition arrangement is the CEMA preferred arrangement.

Belt and System Considerations *Cont.*

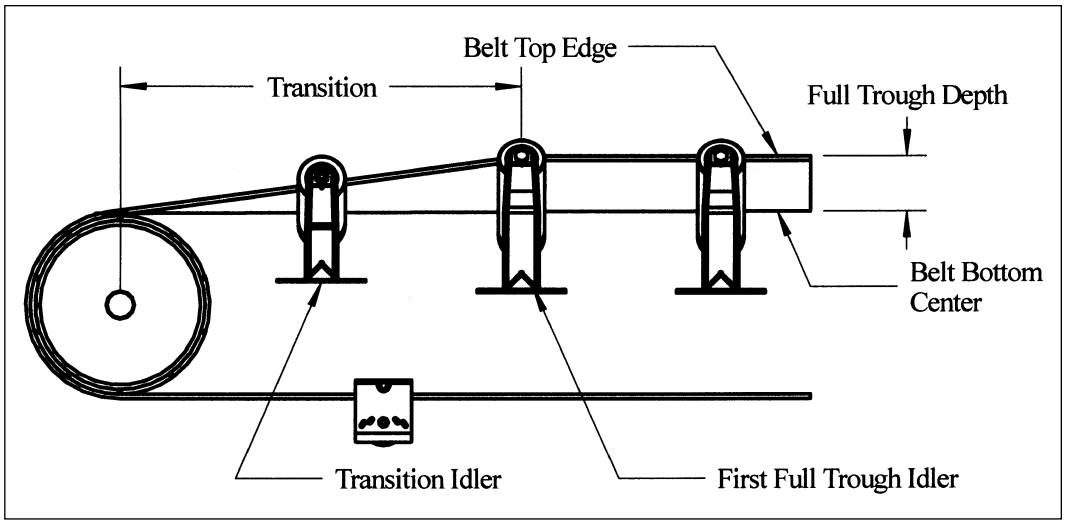

Table 7.28
Full trough recommended minimum transition distance

Idler Trough Angle	% Rated Belt Tension	Recommended Transition Distance = Factor x Belt Width (BW)	
		Fabric Belts	Steel Cord Belts
20°	> 90%	1.8	4.0
	60% to 90%	1.6	3.2
	< 60%	1.2	2.8
35°	> 90%	3.2	6.8
	60% to 90%	2.4	5.2
	< 60%	1.8	3.6
45°	> 90%	4.0	8.0
	60% to 90%	3.2	6.4
	< 60%	2.4	4.4

IMPACT RESISTANCE

Loading bulk material on a conveyor belt creates some impacting force on the belt. This occurs since the material is dropped from some height above the belt surface and the forward speed of the belt may be different than the speed of the material when it contacts the belt.

Fine materials, regardless of weight per unit volume, do not present a problem on impacting the belt because the force is spread over a relatively large surface area. Cover damage due to gouging is minimal and carcass bruising is normally very low in operations involving fine materials.

Lumpy materials can cause appreciable impact on the belt. The heavier the lump, the greater height of fall, or the greater its angular velocity when it contacts the belt, the greater will be the energy tending to rupture the belt. When the material strikes the belt directly over a support such as an idler, damage to the carcass can result from the crushing action of the lump against the idler-supported belt.

Lumpy material having sharp corners and edges can cause cover nicks, cuts, and gouges. The heavier the lump, the greater height of fall, and the greater it's angular velocity at the time of contacting the belt, the more extensive will be the damage to the cover. Sharp, pointed lumps can even penetrate the cover into the carcass and in rare instances completely penetrate through the belt.

To minimize impact damage, every effort should be made to provide good loading conditions for the material handled. Good loading conditions are where the material's free fall drop height and velocity relative to the belt is minimized. The practice of allowing material fines to fall onto the belt before the lumpy material is recommended. The fines help to distribute the impact load over a larger area of the belt and thereby reduce localized belt cover damage.

PULLEYS AND SHAFTS

Introduction
Conveyor Pulleys
- Pulley Types
- Standard Steel Drum Pulleys
- Standard Steel Wing Pulleys
- Advantages of Using CEMA Standards
- Mine Duty Pulleys
- Engineered Pulleys
- Pulley Overloads
- Conveyor Take-up Discussion
- Abrasive Environments
- Pulley Diameters
- Pulley Face Widths
- Pulley Crown
- Pulley Weights
- Pulley Hub and Bushing Systems
- Advantages of Compression Hub/Bushing Systems
- Keyless Locking Assemblies

Pulley Lagging
- Thickness and Attachment
- Rubber Lagging Hardness
- Lagging Grooving
- Ceramic Lagging
- Wing Pulley Lagging
- High Tension Applications

Shafting
- Shaft Materials
- Resultant Loads
- Shaft Sizing
- Shaft Sizing by Stress Limit
- Shaft Sizing by Deflection Limit

Terminology
- Pulley Components
- End Disc/Hub Configurations
- Weld Configurations

Special Pulleys
- Dead Shaft Pulleys
- Magnetic Pulleys
- Motorized Pulleys
- Spiral Pulleys
- Stub Shaft Pulleys

Introduction

Accepted engineering practice is to consider pulleys and shafts together because they form a composite structure whose operating characteristics are mutually related. Therefore, they are discussed as one topic of belt conveyor design and construction in this chapter.

Conveyor Pulleys

Conveyor pulley construction has progressed from fabricated wood, through cast iron, to present welded steel fabrication. Increased use of belt conveyors has led industry away from custom-made pulleys to the development of standard steel pulleys with universally accepted size ranges, construction similarities, and substantially uniform load-carrying capacity for use with belts having a carcass composed of plies or layers of fabric. "Standard" drum and wing pulleys are suitable for these applications. The present trend, however, is to use higher tonnage conveyor systems with wider, stronger belts that incorporate a carcass of either steel cables or high-strength tensile members. In these applications, where high tensions are encountered, the use of custom-made "engineered" welded steel pulleys is dictated. See Chapter 7 for a description of the various types of conveyor belts.

PULLEY TYPES

The most commonly used conveyor pulley is the standard steel pulley as shown in Figure 8.1. They are manufactured in a wide range of sizes and consist of a continuous rim and two end discs fitted with compression type hubs. In most wide-faced conveyor pulleys, intermediate stiffening discs are welded inside the rim. Other pulleys available are self-cleaning wing types, which are used at the tail, take-up or elevator boot locations where material tends to build up on the pulley face. Figures 8.1 through 8.6 illustrate the more common types of conveyor pulleys now in use.

STANDARD STEEL DRUM PULLEYS

Standard welded steel drum pulleys are defined by CEMA B105.1. The standard establishes load ratings, allowable variation from nominal dimensions, permissible crown dimensions, and overall dimensions normally necessary to establish clearances for location of adjacent parts. The standard applies to a series of straight and crown-faced welded steel conveyor pulleys that have a continuous rim and two end discs, each with a compression type hub to provide a clamp fit on the shaft.

The tabulated ratings for drum pulleys and shaft combinations are based on using non-journaled shafting with pulleys centrally located between two bearings. High strength shafting may be required with drive pulleys to withstand the added shaft stresses from torsional loads, overhung loads or turndowns for bearings. Belt tension limits are also provided and must be checked, especially for pulleys with low arc of contacts such as snubs or bends.

CEMA B105.1 is not applicable to single disc pulleys, wing pulleys, cast pulleys, or pulleys not utilizing compression hubs. The standard is not intended to specify construction details other than those listed above. The standard covers pulleys up to 60 inch diameter for shaft diameters up to 10 inches and face widths up to 66 inches and therefore encompasses the majority of combinations of welded steel pulleys with compression type hubs that are normally used in current belt conveyor and elevator practice. It is not recommended to operate standard drum pulleys above a belt speed of 800 feet per minute. For higher speeds, manufacturers should be consulted.

Welded steel conveyor pulleys covered by CEMA B105.1 should not be used with steel cable or other high modulus conveyor belts because such belts create tension concentrations and demand manufacturing tolerances beyond the capacities of these pulleys. Such conveyor belts require engineered conveyor pulleys.

Conveyor Pulleys *Cont.*

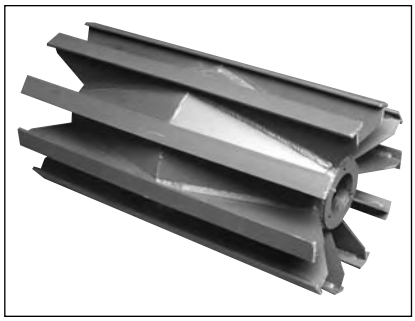

Figure 8.5
Wing Pulley



Figure 8.6
Wing Pulley in use

ADVANTAGES OF USING CEMA STANDARDS

The standard drum and wing pulleys discussed above can be used in most conveyor applications. The designer of belt conveyors will find the CEMA standards listed above invaluable in determining specifications for pulleys and shafting and in finding information that will permit the framework and supporting bearings to be detailed into the design. Suitable pulleys conforming to these standards can be obtained readily from the principal pulley manufacturers. Many of the sizes are considered stock sizes and are in their inventory of finished goods.

MINE DUTY PULLEYS

Standard size drum and wing pulleys are available in mine duty construction. Typically, a mine duty pulley is one whose material thicknesses have been increased for a rigid, conservative design. Mine duty pulleys were originally specified and used for underground mining operations where the abusive environment and high cost of installation demanded a more conservative design. Mine duty pulleys can be appropriate for conveyors with frequent starting and stopping, overloads exceeding 150% of running tensions, or where increased reliability is necessary.

Mine Duty Pulleys can be considered in a conveyor application requiring heavier construction and more conservative design to give greater service life where abrasion is a factor; or there are longer running conveyor hours to consider. Mine duty pulleys are pre-engineered, not to a specific application or for a particular purpose but will have lower stress and deflection on the various components and offer greater service factors over standard CEMA rated pulleys. These increased ratings can be achieved by design and manufacturing considerations including heavier rim and end disc material thicknesses, increased rigidity of shafts and end discs and use of manufacturing processes that increase the endurance strength of the pulley. No ANSI standard governs the load ratings or material thicknesses of mine duty pulleys. Each pulley manufacturer should be contacted for specific details on their mine duty pulley design and manufacturing process.

ENGINEERED PULLEYS

Engineered pulleys are specifically designed to meet load conditions of a particular conveyor. Specific information is required for proper and economical design, since the designer must allow for sufficient strength in the rim, end disc, shaft, and mounting system to carry the belt loads and to assure proper pulley to shaft connection.

Common reasons for using engineered pulleys are:

1. Belt tensions and resultant loads exceed CEMA standards B105.1 and B501.1.
2. Pulley diameter, face width, and shaft diameter combination falls out of size ranges defined in CEMA standards B105.1 and B501.1.
3. Conveyor belt uses steel cable, steel mesh, aramid, or other high modulus carcass.
4. A desire to control project costs by optimizing pulleys for their intended use.
5. Conveyors operate at high speeds with nearly continuous service.
6. Transient belt tensions greater than 50% more than steady state running tensions.

Conveyor Pulleys *Cont.*

PULLEY DIAMETERS

Standard steel drum pulley diameters are 8, 10, 12, 14, 16, 18, 20, 24, 30, 36, 42, 48, 54, and 60 inches. Standard wing pulley diameters are 8, 10, 12, 14, 16, 18, 20, 24, 30, and 36 inches. All other diameters are considered special. These nominal diameters apply to straight and crown-face pulleys and are for bare pulleys only; they do not include any increases in diameter due to the application of lagging. The nominal diameter is measured at the midpoint of the pulley face width. Pulley diameters should be selected per the CEMA standards and the belt manufacturer's recommendations, as described in Chapter 7, as well as for other drive or space considerations.

Permissible variations from nominal diameters of standard steel pulleys are based on face width and given in Table 8.7.

Table 8.7
Permissible Diameter Tolerance

	Diameter Variation (inches)			
	Over Nominal		Under Nominal	
Pulley Face (inches)	Drum	Wing	Drum	Wing
6 thru 26	1/4	1/8	1/8	3/8
over 26 thru 66	5/8	1/8	1/8	3/4

These limitations apply equally to straight face and crown-face pulleys. The nominal diameter is measured at the midpoint of the pulley face width. The diameter is defined as the bare diameter exclusive of lagging. Listed variations may occur from one pulley to another. The permissible diameter variations listed are not to be construed as runout tolerance. Runout tolerance on diameter is measured at the midpoint of the bare pulley face and is given in Table 8.8.

Table 8.8
Permissible Runout Tolerances for Common Applications

Diameter (inches)	Maximum Total Indicator Reading (inches)
8 thru 24	0.125
30 thru 48	0.188
54 thru 60	0.250

When the lagging is not machined, the runout tolerance over lagging is specified by the individual pulley manufacturers.

Engineered pulleys to be used with steel cable or high modulus belts are usually machined with a straight face and have permissible runout tolerances as given in Table 8.9.

Table 8.9
Permissible Runout Tolerances for High Modulus Belts

Type	Maximum Total Indicator Reading (inches)
Unlagged Pulley	0.030
Lagged pulley (under lagging)	0.030
Lagged pulley (over lagging)	0.030

Conveyor Pulleys *Cont.*

ADVANTAGES OF COMPRESSION HUB/BUSHING SYSTEMS

There are several advantages to using compression hub/bushing systems. The tapered bushings are very quick and simple to install and dismount. The clamping force of the bushing on the shaft improves concentricity and minimizes the probability of fretting corrosion. No damage to the shaft occurs because no setscrews contact the shaft, and dismounting is quick and simple. Each hub size will accommodate one bushing size. In turn, each bushing size can accommodate a range of bore sizes. Therefore a pulley with a given hub size will accommodate a range of shaft diameters simply by changing the bushings. This results in a decreased inventory of spare parts required and the subsequent benefits. Since most tapered bushings are also available with a minimum plain bore, stocking these bushings, and boring as necessary to size, can further reduce inventory.

KEYLESS LOCKING ASSEMBLIES

Though not classified as a compression hub/bushing system, keyless locking assemblies are also used to connect shafts to pulleys. These are not to be confused with shallow taper type compression hub/bushing systems that do not require keys to lock non-drive pulleys and some small-bore drive pulleys to the shaft. These devices use many more screws than the other systems. They develop very high expansion/contraction forces and therefore do not utilize keys to lock the pulley to the shaft. A split inner ring contacts the shaft, and a split outer ring contacts the hub bore. There are single and double taper styles. They can have steep, normal, or shallow tapers. Tightening the screws slides the cones towards each other, forcing the inner ring against the shaft and the outer ring against the end disc or solid hub respectively. Due to the very high expansion/contraction forces, keyless locking assemblies require special design considerations to handle the resulting stresses in the shaft and end disc/solid hub.



Figure 8.14
Single Taper Keyless Locking Assembly



Figure 8.15
Double Taper Keyless Locking Assembly

Shafting *Cont.*

Where:

T_1 (lbf) = tight side tension
T_2 (lbf) = slack side tension
T_3 (lbf) = belt tension, non - drive pulleys
T_{cw} (lbf) = belt tension, clockwise
T_{ccw} (lbf) = belt tension, counter - clockwise
W (lbf) = pulleys weight
R (lbf) = Resultant radial load on pulley
$\theta, \theta_1, \theta_2$ (deg) = belt tension angles, (+)as shown
ψ_1, ψ_2 (deg) = belt tension angles, (+)CCW from 0, (–)CW from 0

SHAFT SIZING

Shafts are sized using both a Stress Limit and Deflection Limit. If there is an overhung load, it needs to be included in the Stress Limit calculations. The shaft is sized using the Stress Limit and then the Deflection limit. Then which ever gives the larger shaft size governs. The diameter is then increased to the next standard shaft size.

SHAFT SIZING BY STRESS LIMIT

Equation 8.32 is given in standard B105.1 for the diameter of a pulley shaft loaded in bending and torsion (drive pulley with no overhung load) is:

$$D = \sqrt[3]{\frac{32 \times F.S.}{\pi}\sqrt{\left(\frac{M}{S_f}\right)^2 + \frac{3}{4} \times \left(\frac{T}{S_y}\right)^2}}$$

Equation 8.32
Shaft Size Equation Based on Stress

Where:

D = Shaft Diameter, (in)
F.S. = Factor of Safety = 1.5
S_f = Corrected shaft fatigue limit = $k_a \times k_b \times k_c \times k_d \times k_e \times k_f \times k_g \times S_f$*
k_a = surface factor = 0.8 for machined shaft
k_b = size factor = $(D)^{-0.19}$
k_c = reliability factor = 0.897
k_d = temperature factor = 1.0 for -70°F to + 400°F
k_e = duty cycle factor = 1.0 provided cyclic stresses do not exceed S_f*
k_f = fatigue stress concentration factor:

Steel	Profiled Keyway	Sled Runner Keyway
Annealed (less than 200 BHN)	0.63	0.77
Quenched and drawn (over 200 BHN)	0.50	0.63
(The steels listed below can be considered to be under 200 BHN)		

Continued on following page.

Shafting *Cont.*

Equation 8.33 is derived from the more general equation 8.34 by setting D = D2;

$$\tan\alpha = \frac{R\times A}{2\times E}\left[\left(\frac{C}{I}\right) + \left(\frac{B-2\times A-2\times C}{2\times I_2}\right)\right]$$

Equation 8.34
Shaft Size Equation Based on Deflection of a Shaft Larger in Side the Pulley

Where:

A (in)	= Moment arm for pulley
B (in)	= Bearing centers
C (in)	= Moment arm for shaft reinforcement
R (lbf)	= Resultant pulley load
E_y (psi)	= Young's modulus (29 x 10^6 for steel)
I, I_2 (in^4)	= Area moment of inertia of shaft (0.049087 D^4)
D (in)	= Diameter of shaft at hub
D_2 (in)	= Diameter of shaft inside pulley
Tanμ (deg)	= Tangent of the angle made by the deflected shaft and its neutral axis before bending, at the pulley end disc.

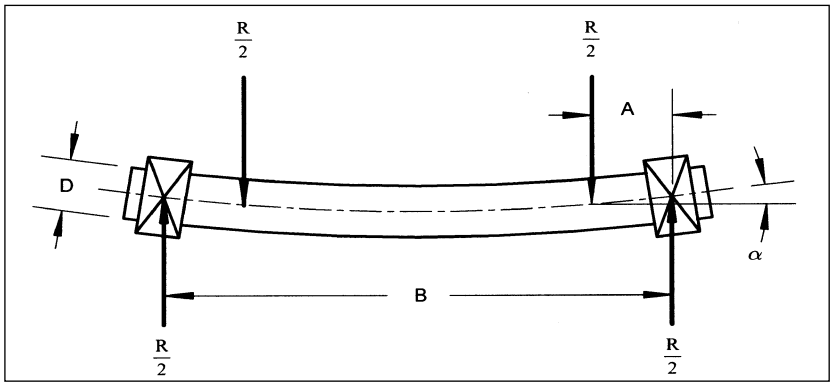

Figure 8.35
Shaft Deflection for a Straight Shaft

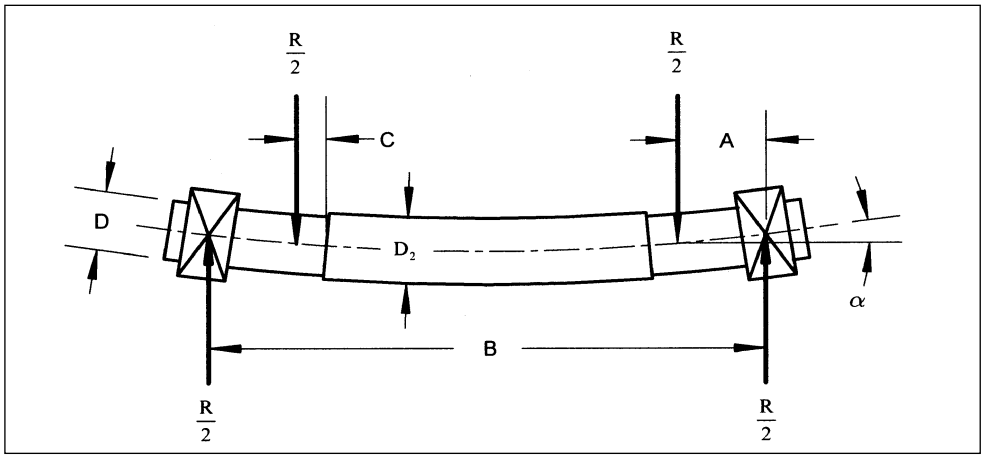

Figure 8.36
Shaft Deflection for a Shaft Larger Inside the Pulley

Vertical Curves *Cont.*

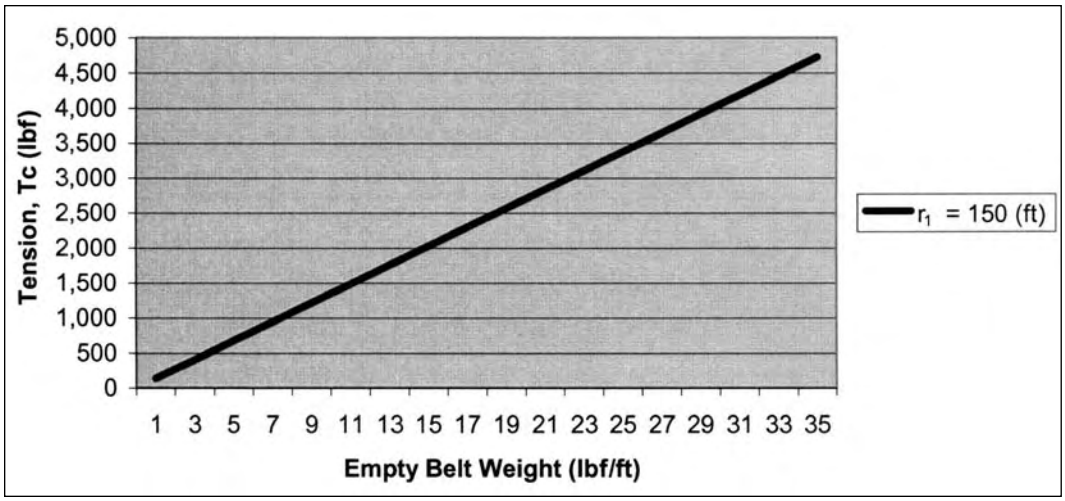

Figure 9.4
Tension Vs belt weight for minimum recommended radius of 150 ft

To insure that the belt tension is sufficiently high to avoid zero tension in the belt edges at a concave curve, a check of the curve radius should be made by the use of the following formula for fabric constructions:

Equation 9.5
Equation for minimum concave curve radius based on edge stress

$$r_1 = \frac{B_m \times BW^2 \times p}{T_c - \sigma_a \times BW} \times \frac{\sin(\theta)}{48} \times \left[1 - \left(\frac{l_c}{BW}\right)^2\right]$$

l_c (ft) = BW/3
θ = Trough angle of wing roll in degrees. (Equal length rollers)

For steel-cable belts, however, this radius can be reduced to permit a controlled buckling which experience has shown neither harms this type of belt or its splices nor causes excessive spillage. In equation 9.5, σa is the allowable stress at the belt's edge. Allowable stress for fabric and steel cord belt is:

Equation 9.6
Equation for allowable edge stress σa

$$\sigma_{a\text{-steel cord belt}} = 75 - 1.5 \times \frac{T_c}{BW}$$
$$\sigma_{a\text{-fabric belt}} = 30$$
$$\sigma_a\,(\text{lbf/in}) = \text{Edge Stress}$$

To prevent stressing the center of the belt beyond the rated tension of the belt, check the radius of the concave curve by using the following formula for both fabric and steel-cable construction:

Equation 9.7
Equation for steel cable and fabric belts minimum radius based on center stress

$$r_1 = \frac{B_m \times BW^2 \times p}{T_r - T_c} \times \frac{\sin(\theta)}{48} \times \left(1 - \frac{l_c}{BW}\right)^2$$

In these formulae:

r_1 (ft)	= Minimum radius of concave curve
BW (in)	= Belt width
p	= Number of plies in the belt
T_c (lbf)	= Tension in belt at point c (or c1)
T_r (lbf)	= Rated belt tension
B_m (lbf/in-width/ply)	= Modulus of elasticity of the conveyor belt
σ_a (lbf/in)	= Edge stress
1_c (ft)	= BW/3
θ	= Trough angle of wing roll in degrees. (Equal length rollers)

Vertical Curves *Cont.*

DESIGN OF CONVEX VERTICAL CURVES

The following equations are used to determine the minimum radius to use to prevent undesirable conditions such as belt buckling, load spillage and over stressing the edges:

Equation 9.14
Equation for minimum radius to prevent buckling of a convex curve

$$r_2 = \frac{(B_m)(BW^2)(p)}{T_c - 30 \times BW} \times \frac{\sin(\theta)}{48} \times \left(1 - \frac{l_c}{BW}\right)^2 \quad \text{where } l_c = BW/3$$

Equation 9.15
Equation for minimum radius to prevent over stress of belt edges of a convex curve

$$r_2 = \frac{(B_m)(BW^2)(p)}{T_r - T_c} \times \frac{\sin(\theta)}{48} \times \left[1 - \left(\frac{l_c}{BW}\right)^2\right] \quad \text{where } l_c = BW/3$$

Where:

r_2 (ft)	= Minimum radius of convex curve
BW (in)	= Belt width
p	= Number of plies in the belt
T_c (lbf)	= Tension in the belt at point c (or c1)
T_r (lbf)	= Rated belt tension
B_m (lbf/in-width/ply)	= Modulus of elasticity of the belt. For values of B_m, see discussion of concave vertical curve design.

Equation 9.15 should be applied to the condition where the belt is being started from rest, with the belt loaded from the tail pulley to the convex curve. Under starting conditions, the allowable rated tension of the belt may be increased. See Chapter 6, "Starting and Stopping Maximum Tension".

Equation 9.14 should be applied to the condition where the belt is operating empty.

Always use the largest of the three values of the minimum convex curve radii determined by formulae 9.15, 9.16 and 9.17 above. See the problem If formula 9.16 governs, investigate the possibility of increasing Tc by providing additional takeup weight.

Vertical Curves *Cont.*

Both the carrying and return idlers should be spaced so that the sum of the belt load, plus the material load, plus the radial resultant of the belt tension does not exceed the load capacity of the idlers. The radial resultant of the belt tension can be calculated approximately as follows:

Equation 9.16
Load on Idlers in convex vertical curve

$$F_r = 2T_c \times \sin\left(\frac{\Delta}{2n}\right)$$

Where:

F_r (lbf) = Resultant force on idlers at convex vertical curve, produced by the belt tension at the curve

T_c (lbf) = Tension in belt at point c or c1

Δ (deg) = Change in the angle of the belt between entering and leaving the curve

n = Number of spaces between the idlers on the curve (must be an integral number)

$$\text{Arc Length of curve: arc (ft)} = 2\pi r_2\left(\frac{\Delta}{360}\right)$$

The troughing idler spacing on a convex curve can be determined in the following manner:

$$\text{Maximum Troughing Idler Spacing } S_{ic} = \frac{I_{lr} - F_r}{W_b + W_m}$$

Where:

S_{ic} (ft) = Maximum troughing idler spacing on the curve

I_{lr} (lbf) = Allowable load per troughing idler (i.e., troughing idler load rating); see Chapter 5

F_r (lbf) = Resultant force on idlers at convex vertical curve, produced by belt tension at curve

W_b (lbf/ft) = Weight of belt

W_m (lbf/ft) = Weight of material

The above formula for maximum troughing idler spacing on the curve is subject to the following three conditions: (1) If the formula results in a troughing idler spacing on the curve greater than the normal idler spacing adjacent to the curve, S_{ic} is limited to values no greater than the normal troughing idler spacing. (For normal idler spacing, see Chapter 5, "Idler spacing". (2) If the formula results in a troughing idler spacing greater than one-half of the normal idler spacing adjacent to the curve, but less than such normal idler spacing, S_{ic} is limited to values no greater than the value given by the formula. (3) If the formula results in a troughing idler spacing less than one-half of the normal idler spacing adjacent to the curve, S_{ic} is limited to no less than one-half normal idler spacing adjacent to the curve. Solve for a new F_r . If possible, increase the radius of the curve to that based on this new F_r value.

There is also a practical limitation in determining the S_{ic} value. The idler spacing on the curve should be in integral and equal increments to simplify structural frame details. This further limits the actual value of S_{ic}. If the length of arc of the curve (arc) is given in feet,

$$N = \frac{\text{arc}}{S_{ic}}$$

Where:

N = Number of spaces between idlers on the curve. Use the next largest integer.

The spacing of return idlers can be determined similarly to the method used for troughing idlers. Use the resultant return idler load plus belt weight and then compare this value with the allowable load rating table in Chapter 5.

Vertical Curves *Cont.*

USE OF BEND PULLEYS FOR CONVEX CURVES

A convex curve employing troughing idlers is recommended for all installations where space will permit for two reasons. First, the belt edge stress in a troughed belt is reduced by a properly designed convex curve. Second, there is less disturbance of the material on the belt as it passes through the change in belt profile, thereby reducing wear on the belt and idlers and preventing spillage over the edges of the troughed belt.

Bend pulleys on the carrying runs of troughed belts, in place of convex curves, are not generally recommended. A bend pulley should be used only in special cases, when space will not permit a properly designed convex curve and the belt conveyor is not sufficiently loaded to cause spillage of material over the edges of the flattened belt as it passes over the bend pulley.

Under these conditions, the diameter of the bend pulley should be large enough to insure retention of the material on the belt as the belt changes direction. The diameter required varies with the cosine Δ (angle of change in direction) and V^2 (square of the belt speed). This becomes quite large for belt speeds greater than 500 fpm. Naturally, this is another reason why troughing idlers are preferable.

The minimum diameter of the bend pulley, for a given belt velocity or speed, should be as listed in Table 9.17 below:

Table 9.17
Minimum bend pulley diameter

Minimum diameter of bend pulley (inches)	Belt velocity or belt speed (fpm)
16	200
20	300
36	400
54	500

In no case should the diameter be less than the minimum value shown in the minimum pulley diameter tables in Chapter 7.

Horizontal Curves *Cont.*

The distribution of forces between each of the three individual rolls can be proportioned and defined by the following equations.

$$F_{TI} = \frac{b_{w1}}{BW} \times F_T$$

~~$$F_{TI} = \frac{b_{w1}}{BW} \times F_T$$~~

$$F_{TC} = \frac{B_C}{BW} \times F_T$$

$$F_{TO} = \frac{b_{w2}}{BW} \times F_T$$

Where b_{w1} is the length of belt in contact with the inside idler wing roll and b_{w2} the length of belt in contact with the outside idler wing roll. b_c is the length of the idler center roll. Resolution of these individual roll applied forces into their normal and parallel components can be accomplished as well.

Normal Forces

$$F_{TNI} = F_{TI} \cdot \mathrm{Sin}(\beta + \alpha)$$

$$F_{TNC} = F_{TC} \cdot \mathrm{Sin}(\alpha)$$

$$F_{TNO} = F_{TO} \cdot \mathrm{Sin}(\beta - \alpha)$$

Parallel Forces

$$F_{TPI} = F_{TI} \cdot \mathrm{Cos}(\beta + \alpha)$$

$$F_{TPC} = F_{TC} \cdot \mathrm{Cos}(\alpha)$$

$$F_{TPO} = F_{TO} \cdot \mathrm{Cos}(\beta - \alpha)$$

Tests and practical experience have shown that the total parallel force is an accurate quantification of the radial force due to tension at the section. The total destabilizing or motivating force therefore can be expressed by the following equation.

$$F_{TP} = F_{TPI} + F_{TPC} + F_{TPO}$$

Horizontal Curves *Cont.*

"μ" is the appropriate friction factor between the belt and the corresponding inside, center, or outside idler roll. Respective values for friction factor should take into consideration belt surface conditions, i.e. temperature, moisture, wear, etc. Proper system alignment, installation tolerances and maintenance practices are also critical for successful operation of the curved conveyor. Significant additional forces can be placed on idler rollers and bearings if the idlers are not carefully aligned on convex and horizontal curves.



Figure 9.25
Straight conveyor to horizontal curve transfer

APPLICATION CONSIDERATIONS

It is apparent that for proper horizontal curve design in belt conveyors the only true variables are the tension in the belt at the curved section, gravity action on the belt and material, and the interaction of friction as related to the contact of the belt with the idler rolls. Evaluation of the full range of tensions and loading conditions can become time consuming and tedious. Considerable time and effort should be devoted to detailed analysis for proper determination of the complete range of belt tensions expected. It is sometimes beneficial to carefully locate and size tripper boosters for tension stabilization for curve design. Placing a booster just upstream of a desired curve location can significantly lower the tension in the curve zone as well as greatly reduce the deferential between maximum and minimum tension. For applications such as tunneling, where very close adherence to profile and route are often combined with specific radii requirements the only possible means of meeting requirements may be specifically locating a booster in conjunction with the curve. Also, friction factors should be adjusted as necessary to account for all anticipated operating conditions on the belt. Instances where very low coefficients of friction are anticipated may support using effective "zero" factors. Modern automated analysis methods make quick evaluation of multiple conditions practical and advisable.

Not to be neglected or minimized is the return side of the belt. Here, tensions are often generally stable except for acceleration/deceleration, and stabilization forces are based solely on the weight of the belt and friction. Belt training often mandates vee-return idlers and/or guide rolls, with some instances even necessitating three-roll troughing idlers on the return run. Again, detailed analysis and consideration of the full-range of operating conditions are a must.

Introduction

Over the years a wide range of approaches to enhance the ability of belt conveyors to convey bulk material up steep inclines have evolved. Concerns about material degradation and conformity to terrain have also opened up a market for belt conveyors that can lower material down steep declines as well. This increased ability, along with the already very adaptable path that they can negotiate, (horizontal, vertical and compound curves), makes belt conveyors the most versatile method of moving bulk material between the required loading and unloading points.

For the approaches discussed in this chapter, nearly all of the material in this book is relevant. However, allowable material cross-sections, belt speeds and lump size restrictions differ from standard belt conveyor practice for all these approaches. For some of them, the methods of tension and power calculation must also be suitably modified.

Incline Limitations with Conventional Conveyors

In Chapter 3, Table 3.5 lists recommended maximum inclination angle limits that conventional troughed conveyors with smooth top cover belts can safely convey various bulk materials. These maximum inclination angles generally range from 10° to 20° depending on the bulk material. Beyond these recommended maximum angles of incline, the material will want to:

1. Slide down the belt enmasse.
2. Slide internally on top of itself.
3. Lumps will roll down the belt.
4. Lumps will roll down over top of the fines.

Characteristics of bulk materials such as density, lump size, lump shape, moisture content, internal angle of friction (angle of repose) and coefficient of friction between the material and the belt's top cover, are all factors that contribute to the maximum incline angle up which material can be conveyed up by a belt with a smooth top cover. Of all these, it is the value of the material's angle of repose that is most indicative of its ability to be conveyed up an incline.

Light, fine, dry materials, such as sand or grain, can slide easily on a smooth top cover belt, as the individual particles are very small and do not indent into the rubber cover. Only the coefficient of friction between the belt and the material limits the incline in this case. Material that is heavy and consists of large irregular lumps allows increased angles of inclination. The edges of the lumps tend to indent into the belt cover and a mechanical holding action takes place. This is the reason rubber covers generally allow a greater angle of inclination than PVC covers. Rubber covers usually are softer and exhibit a higher co-efficient of friction than PVC.

Mechanical interlocking of adjacent lumps also assists in increasing the allowable angle of inclination. Most conveyors, however, handle material that is a combination of lumps and fines. The fines migrate to the belt surface as the belt runs, sometimes lowering the allowable angle of incline. At other times, the fines will fill the voids between regular sized lumps, reducing their tendency to roll back down the belt thus increasing the maximum allowable inclination. Small, uniform, spherical material, such as iron ore pellets, present a problem in that they can negotiate a given angle of incline when continuously fed, but the trailing end of a load will not negotiate the same incline, presenting severe rollback problems.

A belt that is wet before the material is loaded, a common occurrence, causes the attainable angle of inclination to be lowered. The moisture reduces the coefficient of friction between the top cover of the belt and the material, thus the noticeable reduction. The agitation that the bulk material experiences as it travels over each idler, previously discussed in Chapter 3, greatly influences the angle of inclination at which the material can be successfully conveyed. Therefore belt speed and belt sag are the two parameters of the conveyor design that most influence the permissible angle of inclination. Loading at a low angle will maximize the angle of inclination that can be obtained. Having the material settled

Molded Cleat Belts *Cont.*

ADVANTAGES OF MOLDED CLEAT BELTS

1. Economical method of increasing the angle of incline.
2. No additional mechanical components over a standard belt conveyor.

DISADVANTAGES OF MOLDED CLEAT BELTS

1. The allowable angle of incline is limited.
2. The cleats will wear more rapidly than a standard smooth top cover and the belt may lose its inclined conveying capabilities.
3. At higher belt speeds, as the cleats pass over the return rollers, vibrations can occur that cause accelerated cleat wear and a reduction in return roll bearing life.
4. The belt is more difficult to clean than standard belt conveyors. Belt brush, belt beater, air blast, water spray, or a wash box belt cleaner must be used.
5. Molded cleat belts are usually restricted to short conveyors where few or no return idlers are needed and either the material does not stick to the surface or where the carry back is acceptable.



Figure 10.4
Example of molded shallow multi-chevron cleated belt



Figure 10.5
Example of molded deep "U"-shaped cleated belt

Pocket Belts

TYPES OF POCKET BELTS

Pocket Belts, as they are generically called, encompass the entire range of steep angle conveying from 20° to 90° inclines. There are two main models of Pocket Belts. The most common model is that shown in Figure 10.7. Flexible corrugated sidewalls have been bonded to the edges of the belt, along with transverse cleats spanning between the sidewalls. These additions form complete rectangular partitions or "pockets" for the material to ride in as shown in Figure 10.7. The sidewalls allow the belt to convey a large cross-section of material with the belt in a flat position. The sidewalls and cleats increase the load carrying capacity over normal belt conveyors and even belt conveyors with molded cleat belts up steep inclines. Pocket belts can even elevate materials to the ultimate in steep angle inclines (i.e. vertical). This model of Pocket Belt can elevate material to 1,000 feet at capacities of 1000 tph and for short lifts like on board self-unloading ships (Figure 10.9), capacities of 6,000 tph are possible.



Figure 10.7
Typical Pocket Belt for incline elevating

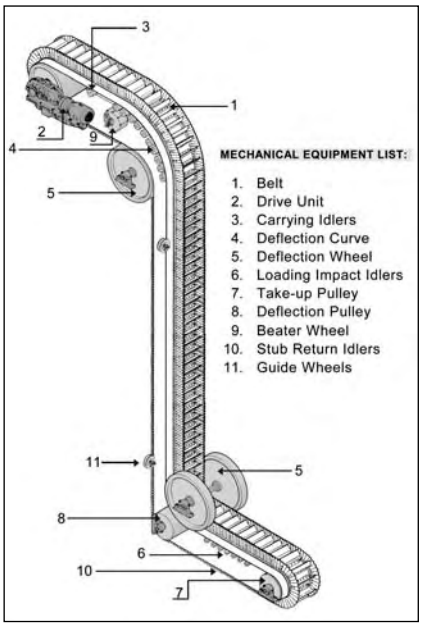

Figure 10.8
Typical Pocket Belt for vertical elevating

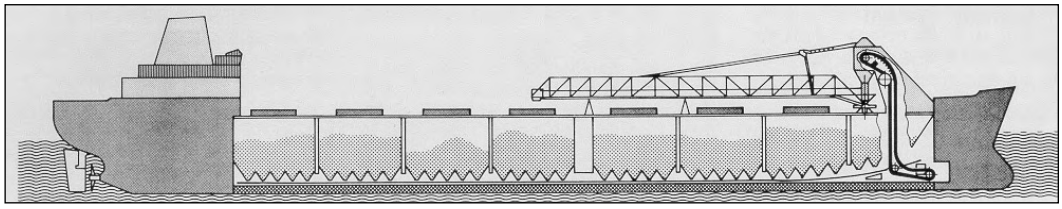

Figure 10.9
Pocket Belt located in the bow of a self-unloading ship

Figure 10.8 illustrates the mechanical equipment required for a typical vertical system using these types of belts. A Pocket Belt system uses many of the same standard mechanical components that conventional conveyors use. The drive is the same as that required for a conventional conveyor. That is the motor, high speed coupling, reducer and low speed coupling. A holdback is a definite requirement to prevent anti-reversal when loaded. The drive's reduction ratio might be a little higher than normal with Pocket Belts, due to the required drive pulley diameter. Normally larger diameter pulleys are required with Pocket Belt systems to prevent the sidewalls from being over stressed. Although at times the pulleys used are slightly larger than would be used on a conventional conveyor they are still CEMA Standard pulleys. Pulleys used on a particular system are generally all the same diameter.

Totally Enclosed Belts *Cont.*

Basic Components of a Pipe/Tube Conveyor

Figure 10.27 provides an illustration of a typical complete system. Such a system, starting at the tail pulley where the belt is flat, consists of:

1. A tail pulley in a horizontal gravity take-up carriage.
2. A tail end and carrying side transition zone: The belt transitions from flat at the tail pulley to troughed at the beginning of the loading area.
3. A tail end loading area: The remaining transition zone from the loading area to the Pipe/Tube shape. The belt transitions from its troughed shape at the loading zone to the completely enclosed Pipe/Tube shape.
4. A series of closely spaced panels for most of the conveyors length: The rolls in the top half of the panel maintain the belt in a tubular shape, support the weight of the belt and the material being conveyed.
5. A head end transition zone: The belt transitions from its Pipe/Tube shape to flat at the head end discharge pulley.
6. A head end discharge pulley: Typically the head pulley is also the drive pulley.
7. A head end return transition: The belt transitions from its flat shape at the head discharge pulley to the fully enclosed Pipe/Tube shape.
8. The series of closely spaced panels with rollers in the bottom half of the panels maintain the belt in its tubular shape until the tail end.
9. A tail end transition along the return: The belt transitions from its Pipe/Tube shape to flat at the tail pulley.

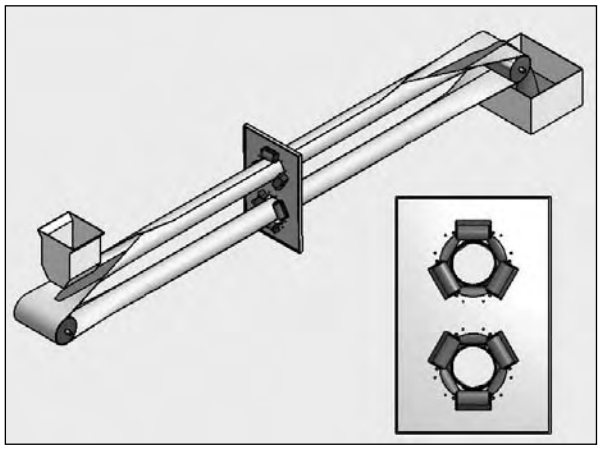

New Graphic

Figure 10.27
Simplified illustration of a Pipe/Tube conveyor system

Other possible system configurations include:

1. In lieu of driving the head end discharge pulley, a return side drive usually located near the head end can be used, but it must be remembered that the belt must be flat to go around any pulleys so the pre-requisite transition zones are required either side.
2. Tail end drive for regenerative conveying.
3. Head and tail end drives for long overland conveyors.
4. A vertical gravity take-up at the head end on the slack (return) side of the drive pulley in lieu of the tail end horizontal gravity take-up.
5. Intermediate loading zones can be utilized in the design but it must be remembered that the Pipe/Tube shape must be transitioned to the troughed shape at the intermediate loading zone and back again afterwards.

Totally Enclosed Belts *Cont.*

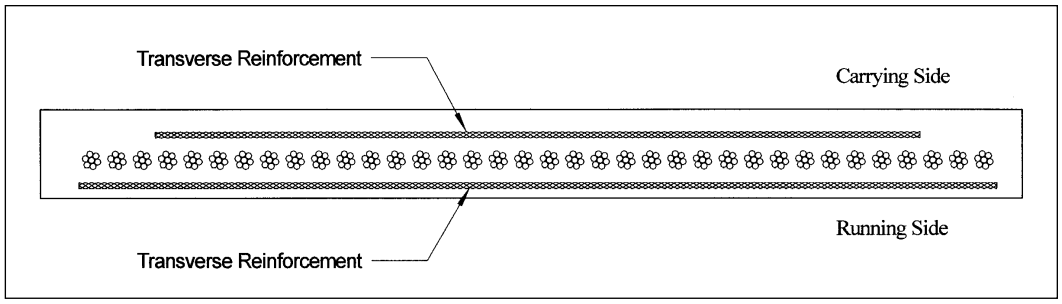

Figure 10.29
Typical steel cord Pipe/Tube conveyor belt construction

Pipe/Tube conveyor belts can be obtained in the following constructions:

- Nylon-nylon (P)
- Polyester-nylon (EP)
- Aramid (D)
- Aramid-nylon (DP)
- Steel cord (St)

The belts can also be obtained in all the usual cover grades to suit the application:

- Cut resistant
- Abrasion resistant
- Oil resistant
- Turpentine resistant
- Self-extinguishing
- Anti-static
- Flame retardant
- Heat resistant
- Energy saving
- Combinations of the above

Note that because any high temperature material is fully enclosed by the belt, heat resistant Pipe/Tube conveyor belts do not allow as high a material temperature as with conventional conveyors. The ambient air cannot circulate and cool the material being conveyed or the return run of belt as is the case with conventional belt conveyors.

There are numerous Pipe/Tube conveyor belt manufacturers in the world. Although Pipe/Tube conveyor belts were proprietary in the early years, today's large number of potential suppliers means healthy competition and a potential customer, need not fear being tied to just one supplier.

Pipe/Tube Conveyor Capacities

Table 10.30 provides a guide to the allowable cross-sectional areas and capacities of Pipe/Tube conveyors. Since most Pipe/Tube conveyor designs and conveyor belts come from international sources, they have traditionally been based on hard metric dimensions. There is no reason that a Pipe/Tube conveyor cannot be built to hard Imperial units. The table however provides both metric and imperial units for convenience. There are no international standards for Pipe/Tube conveyors. The industry seems to have agreed only on the nominal diameters of the Pipe/Tube . The other parameters that contribute to the allowable capacity are determined by the Pipe/Tube conveyor designer in conjunction with the belt supplier. These parameters are the amount of belt overlap, flat belt width, actual Pipe/Tube diameter, and belt thickness. The amount of overlap is usually 3 to 4 inches for small Pipe/Tubes up to 10 to 12 inches for the largest diameters.

Totally Enclosed Belts *Cont.*

The belt widths are usually hard metric. Most suppliers will build in 2 inch [50 mm] Pipe/Tube diameter increments with the actual flat belt width in 6 inch [150 mm] increments. Be aware that some manufacturers/designers may wish to use a narrower or wider belt than that assumed in Table 10.30. The actual Pipe/Tube diameter, that is the diameter that can be inscribed in the hexagon arrangement of idlers, will vary between manufacturers/designers as they adjust the belt width and overlap to their manufacturing and design preferences respectively. The thickness of the belt will have a slight effect on the capacity, as the capacity is based on the actual I.D. of the Pipe/Tube and not on its nominal diameter.

Table 10.30
A guide to Pipe/Tube conveyor capacities

Nominal Pipe Diameter		Actual Pipe O.D.		Belt Width		Cross-sectional Area (75% Fill)		Nominal Capacity			
								Volumetric		Weight	
								100 fpm	1 m/s	@ 100 fpm @ 100 lbf/ft³	@ 1 m/s & @ 1.6 t/m³
(in)	(mm)	(in)	(mm)	(in)	(mm)	(ft²)	(m²)	(ft³/hr)	(m³/h)	(tph)	(mtph)
6	150	6.5	166	23.6	600	0.135	0.013	811	45	41	72
8	200	8.4	213	29.5	750	0.226	0.021	1,354	75	68	121
10	250	10.1	257	35.4	900	0.345	0.032	2,069	115	103	185
12	300	12.4	314	43.3	1,100	0.503	0.047	3,020	168	151	269
14	350	14.6	370	51.2	1,300	0.707	0.066	4,241	236	212	378
16	400	16.5	418	57.1	1,450	0.906	0.084	5,437	303	272	485
18	450	18.3	466	65.0	1,650	1.150	0.107	6,897	384	345	615
20	500	20.6	523	72.8	1,850	1.416	0.132	8,495	474	425	758
22	550	22.5	570	78.7	2,000	1.716	0.159	10,299	574	515	919
24	600	24.6	626	86.6	2,200	2.104	0.195	12,622	704	631	1,126
26	650	26.5	674	92.5	2,350	2.467	0.229	14,801	825	740	1,320
28	700	28.4	722	98.4	2,500	2.859	0.266	17,154	956	858	1,530
30	750	30.3	769	104	2,650	3.280	0.305	19,680	1,097	984	1,755
32	800	32.2	817	110	2,800	3.730	0.347	22,380	1,247	1,119	1,996
34	850	34.4	873	118	3,000	4.291	0.399	25,749	1,435	1,287	2,296

The allowable capacity of a Pipe/Tube conveyor is based on roughly 75% of the cross-sectional area of the actual Pipe/Tube I.D. This is increased to approximately 80-85% where there are no lumps and good feed control, down to 60% or lower when the material is very lumpy or feed control is poor. Also, tight curves reduce the cross-sectional area that should be utilized. In comparison, the CEMA allowable cross-sectional areas for conventional conveyors are based on a safe edge distance (0.055 x BW+0.9 (in) and an appropriate surcharge angle. As most designers do not utilize the full 100% CEMA allowable cross-sectional area, but more like 80% of the area, it is prudent to compare the 75% allowable Pipe/Tube conveyor cross-section with 80% of the CEMA maximum allowable cross section as provided in Tables 4.4 through 4.7 of this book. A comparison shows that the conventional conveyor has approximately 150% to 300% higher capacity than a Pipe/Tube conveyor for the same belt width. Although this would appear very significant, it is the design price to be paid for the many advantages that the Pipe/Tube conveyor has over conventional conveyors. The 150% to 300% range is due to the three possible trough angle variations (20°-35°-45°) and the material surcharge angle variations (0°-30°) affect on the allowable cross-sectional area of conventional conveyors that does not affect the allowable capacities of Pipe/Tube conveyors.

Note that Pipe/Tube conveyors are very susceptible to severe damage from overfilling. It is highly recommended that these conveyors be loaded via a feeder and not directly from a bin or hopper gate. In addition, an overfill condition sensor should be used at the loading zone to shut down the conveyor in the event of such a condition. To make up for their smaller allowable cross-sectional areas, Pipe/Tube conveyors are often designed to run at higher than the belt speeds typically used for conventional conveyors. Speed has much less affect on the material being handled by Pipe/Tube conveyors due to their totally enclosed nature.

Totally Enclosed Belts *Cont.*

There are still the localized problems at the tail end loading zone and the head end discharge zone, where belt speed will affect the material. These short distances where the Pipe/Tube is open must be taken into account when selecting the belt speed. The affect of higher belt speeds at the loading and discharge zone must obviously be taken into account in the overall design.

Small Pipe/Tube diameter conveyors, like conventional conveyors, have traditionally been used with small roll diameters and thus slow belt speeds. The slow belt speeds are used to keep the idler roll rotational speed within reason (650-750 rpm). The small roll diameters were also necessary to get the six inline rolls around the small Pipe/Tube diameter. With the newer offset roll panel designs, much larger roll diameters can be used on small Pipe/Tube conveyors and slow belt speeds are no longer a strict design requirement.

Lump size is typically 25% to 33% of the Pipe/Tube diameter when conveying at the 75% cross-section normally recommended. However, maximum lump size depends heavily on the percentage of lumps. Table 10.31 provides some guidelines. If the material has a high percentage of lumps then the lower value should be used. If it is just an occasional lump, then the higher value applies. Even larger lumps can be handled adequately as long as the filling ratio is appropriately reduced.

Caution needs to be exercised on this design point, as errant large lumps can cause severe damage to the belt, the idler rolls, and the structure. While large lumps can roll to the side of a conventional belt conveyor or even off onto the ground, such a lump has nowhere to go on a Pipe/Tube conveyor. Lump size control is very important, much more so than with conventional conveyors.

Table 10.31
A guide to maximum recommended lump sizes

Nominal Pipe Diameter		Mostly Lumps		Occasional Lumps	
(in)	(mm)	(in)	(mm)	(in)	(mm)
6	150	1-1/2	38	2	50
8	200	2	50	2-1/2	60
10	250	2-1/2	60	3-1/4	80
12	300	3	75	4	100
14	350	3-1/2	90	4-1/2	115
16	400	4	100	5-1/4	133
18	450	4-1/2	110	6	150
20	500	5	125	6-1/2	165
22	550	5-1/2	140	7	180
24	600	6	150	8	200
26	650	6-3/8	160	8-1/2	215
28	700	7	180	9	230
30	750	7-3/8	190	9-3/4	250
32	800	8	200	10-3/8	265
34	850	8-1/2	215	11	280

As can be seen in Figure 10.26, the structure width is always considerably less than that of a similar capacity conventional style belt conveyor. Between the head and tail terminals that is. A significant portion of the structure width is taken up by the access walkway necessary alongside. So a Pipe/Tube conveyor has only 65% of the width of the structure for narrow belts and 55% for wide belts. Where there is access from the ground, like the system shown in Figure 10.25, the Pipe/Tube conveyor has only about 35% to 45% of a conventional conveyors' horizontal space requirements. Because the structure is narrower and much deeper this fits in well with the structural design requirements for elevated

Totally Enclosed Belts *Cont.*

A phenomenon occurs on the return run of Pipe/Tube conveyors known as 'reduction in diameter'. The Pipe/Tube wants to assume a smaller diameter than the carrying run. Although not entirely understood, one of the major reasons is that all the belt weight bears on the flexible overlap zone. Some designers for this reason utilize a smaller hexagonal arrangement of rolls in the return run. The resulting extra overlap allows for better return run sealing.

As mentioned previously Pipe/Tube conveyor technology has traditionally come from international sources. The preferred roll design has therefore been based on sealed for life, deep groove ball bearings. By necessity with Pipe/Tube conveyors, roll gaps must also be small (1/8 to 1/4 inch or at least less than the belt thickness) to prevent the exposed overlapped edge from getting caught in the gap should the belt twist (and it inevitably will). A major advantage of the offset panel design is that it has zero effective roll gap, due to the adjacent but alternating rolls overlapping slightly. The offset panel design also allows room for the grease fittings and lines required for re-greasable taper roller bearing design rollers should they be preferred. The allowable panel spacing depends on numerous parameters the most important of which are:

- Pipe/Tube nominal diameter
- Belt construction
- Local belt tension
- Pipe/Tube sag between panels
- Material weight
- Belt weight
- Curve radius

The panel spacing increases with increasing Pipe/Tube diameter. As the Pipe/Tube diameter increases, the bending stiffness in the longitudinal direction also increases, allowing it to resist the forces causing the Pipe/Tube to sag and the seal to open up. Conversely as the weight of the material increases the allowable panel spacing decreases as the weight of material tries to deflect the Pipe/Tube causing the seal to open. Curves also have a profound effect on the allowable panel spacing. As the curve radii become tighter, the allowable panel spacing must be decreased to prevent the Pipe/Tube shape from being crushed or buckled.

Table 10.41 provides some preliminary guidelines for panel spacing. Only an analysis of all the relevant parameters by a skilled designer, can determine the actual panel spacing required along any given conveyor.

Table 10.41
A guide to panel spacing for Pipe/Tube conveyors

Nominal Pipe Diameter		@25 lbf/ft³		@50 lbf/ft³		@75 lbf/ft³		@100 lbf/ft³		@125 lbf/ft³	
(in)	(mm)	(ft)	(m)	(ft)	(m)	(ft)	(m)	(ft)	(m)	(ft)	(m)
6	150	4.75	1.45	4.50	1.37	4.25	1.30	4.00	1.22	3.75	1.14
8	200	5.25	1.60	5.00	1.52	4.75	1.45	4.50	1.37	4.25	1.30
10	250	5.50	1.68	5.50	1.68	5.25	1.60	5.0	1.52	4.50	1.37
12	300	6.00	1.83	5.75	1.75	5.50	1.68	5.25	1.60	5.00	1.52
14	350	6.25	1.91	6.00	1.83	5.75	1.75	5.50	1.68	5.25	1.60
16	400	6.75	2.06	6.50	1.98	6.25	1.91	6.00	1.83	5.75	1.75
18	450	7.00	2.13	6.75	2.06	6.50	1.98	6.25	1.91	6.00	1.83
20	500	7.25	2.21	7.00	2.13	6.75	2.06	6.50	1.98	6.25	1.91
22	550	7.50	2.29	7.25	2.21	7.00	2.13	6.75	2.06	6.50	1.98
24	600	7.75	2.36	7.50	2.29	7.25	2.21	7.00	2.13	6.75	2.06
26	650	8.00	2.44	7.75	2.36	7.50	2.29	7.25	2.21	7.00	2.13
28	700	8.25	2.51	8.00	2.44	7.75	2.36	7.50	2.29	7.25	2.21
30	750	8.50	2.59	8.00	2.44	7.75	2.36	7.50	2.29	7.25	2.21
32	800	8.50	2.59	8.25	2.51	8.00	2.44	7.75	2.36	7.50	2.29
34	850	8.75	2.67	8.50	2.59	8.25	2.51	8.00	2.44	7.75	2.36

Totally Enclosed Belts *Cont.*

Figure 10.44 shows a typical 3 roll garland troughing idler with the 2 roll garland hold down idler on top of the belt cover flaps. Figure 10.45 is a cross-section of a Fold Belt that helps illustrate this type of system further. Note the garland hold down idlers are spring loaded to conform to the volume of material in the trough. For steep angle conveying, the slightly modified arrangement, shown in Figure 10.46, with a spring loaded center roll (load compensating idler) is used to reduce the cross-sectional area to prevent material slide-back, when the belt is filled to less than the maximum carrying capacity.

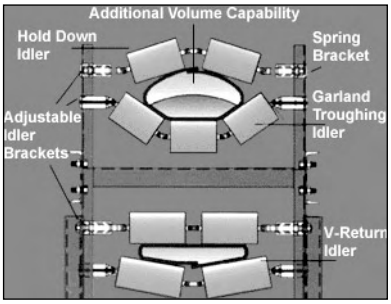

Figure 10.45
Typical Fold Belt system cross-section



Figure 10.46
Typical Fold Belt idler arrangement for steep angle conveying

Capacities of Fold Belts

The CEMA load capacity cross-sections do not apply to Fold Belts. There is no need to maintain the CEMA edge distance. The belt can be fully loaded as long as there is still the prerequisite overlap. See Figure 10.47. This means much higher capacities can be handled, typically 65 to 85% more, for the effective belt width (i.e. folded), than conventional conveyors. See Table 10.49. However, Fold Belts only have a capacity of about 40% of a conventional conveyor of the same un-folded belt width. Both methods of comparison are somewhat unfair to the other type of system. A true design comparison must weigh all the relevant factors.

Additionally, if steep angle conveying is not required, the belt can be loaded and convey material with the belt cover flaps in a "U" orientation from the load point until discharge. This allows the belt to carry a substantially greater load on a narrower structure without fear of material spillage or the need for belt skirting. The following belt widths are available: 12, 15 18, 21, 24, 27, 30 and 36 inches. The belt width is defined by the dimension between the hinging areas. The actual, flat belt width is two times this width. Capacities and lump size limitations are shown in Table 10.48. The minimum capacity is based on the minimum cross-sectional area to eliminate material sliding on steep inclines and declines. The maximum capacity is based on the maximum cross-sectional area of material that will still allow an adequate overlap of the cover flaps.

The proprietary belt is available in strengths to 600 PIW based on the unfolded flat width. They are available with a variety of cover compounds and are normally used with vulcanized splices; however mechanical splices may also be used. Belt speeds are comparable to conventional conveyors. Enclosing the material allows higher belt speeds when material blow-off is the limiting factor.

Totally Enclosed Belts *Cont.*

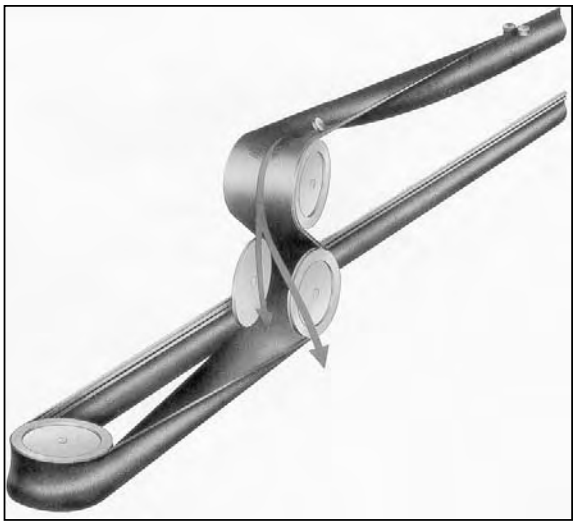

Figure 10.65
Tripper type discharge

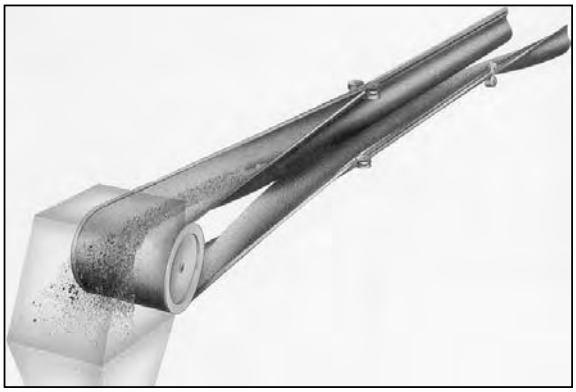

Figure 10.66
Horizontal type discharge

The belt requires a long, gradual transition to open from its totally enclosed pouch shape to flat as the troughing angle can be roughly considered as 90° and the belt edge steel cord. The belt edge is allowed to take approximately a 5° maximum fleet angle. Notice that after a discharge point, the return belt is always twisted so that the dirty side of the belt is on the inside and the two edge profiles are located at the top to support the belt again. This can probably be seen best in Figure 10.66 as the return run of belt must be twisted 180°.

Belt cleaners are generally not used with Suspended Belts. Centrifugal force and the belts flexibility make it almost self-cleaning. Any carry back is contained within the enclosed return run and no spillage or build-up on components results.

Capacities

Material fill is approximately 1/2 of the 'pouch's' cross-sectional area when loaded. Approximate capacities are shown in Table 10.67. A conventional conveyor can handle 300 to 600% more material for the width of the belt when unfolded flat. However, the Suspended Belt's other advantages, such as its environmental friendliness and/or its extreme flexibility in applications where a very convoluted conveyor path is required, should make this type of conveyor a strong candidate for consideration.

The maximum allowable lump size is approximately 1/3 of the "pouch's" cross-sectional area. By reducing the capacity being handled, the maximum lump size may be appropriately increased.

Totally Enclosed Belts *Cont.*

The local radial component of the cover belt tension can be calculated by the following equation.

$$P_r = \frac{T}{R}$$

Where:

T (lbf) = Local belt tension

R (ft) = Curve radius

P_r (lbf/ft) = Radial load

This radial load elevates and seals the material in the sandwich. However, great care must be taken in using this value, as the mechanics, at each location of interest, varies and therefore must be fully analyzed. The mechanics, shown in Figure 10.71 and its following equation, does not usually apply in convex curves, as the angle is not a constant, and the cover belt and material weight may often reduce the radial component of the cover belt tension that can be used to elevate the material.

Although this method supplies a very uniform pressure on the material, it suffers from the fact, that at high lifts, the radius must be increased so the radial pressure does not become excessive. The system must be designed, so that with a load near the top, there is enough radial load from the belt tension to elevate the material even though the remainder of the system is empty.

Pressure can be applied, on the back of the cover belt, mechanically with spring-loaded rollers across the width and along its length as shown in Figure 10.75. Although the pressure applied is somewhat discrete, even if the rollers are closely spaced, the transverse and longitudinal stiffness of the belt will help to distribute the pressure enough to adequately secure the material. This has been the most prolific type of Sandwich Belt system supplied to date.

Expanded Graphic

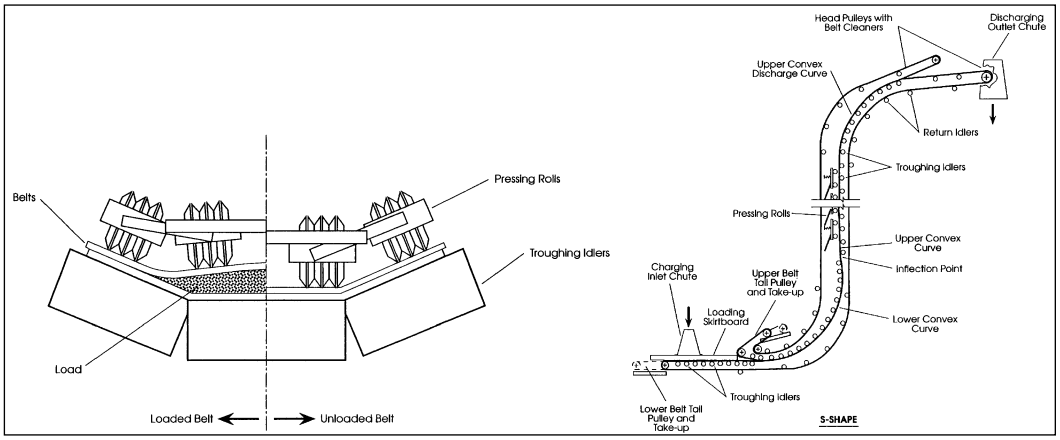

Figure 10.75
Illustration of a pressure roll type Sandwich Belt cross-section

Almost all Sandwich Belts use convex curves to transition to an incline from the lower horizontal run and from the incline to the upper horizontal run. The convex curve is inverted when going from the horizontal to an incline and it is right side up when going from an incline to the horizontal. Concave curves can be used to transition to an incline, but large curve radii and high applied pressures are required to prevent belt lift off. The radial component of the belt tension in the cover belt will effectively lower the normal load from the cover belt weight, pressure means to the back of the cover belt, etc.

For small radii convex curves, nylon warp carcass belts are preferred due to their low modulus of elasticity. The allowable radius can be reduced by using a combination of special low modulus nylon carcass belting, long center roll troughing idlers usually at 20°, and 3 equal roll troughing idlers at low troughing angles such as 10° or even lower.

Totally Enclosed Belts *Cont.*

Design of Sandwich Belts

More attention must be paid to the design of these convex curves than with normal conveyors, as they run closer to the design limits for a longer amount of the time. The equations from Chapter 9 on "Curves" should be supplanted by the equations and limitations that follow. In certain design circumstances, the limitations on belt edge and center tension used in the Chapter 9 calculations must be eased to reduce the curve radius.

$$T_{edge} = T_{ave} + \frac{(B^2 - L^2) \times \sin\beta \times B_m \times p}{48 \times B \times R}$$

$$T_{ctr} = T_{ave} - \frac{(B - L)^2 \text{ x } \sin\beta \text{ x } B_m \text{ x } p}{48 \text{ x } B \text{ x } R}$$

Where:

T_{ctr} (PIW) = Center tension
T_{edge} (PIW) = Edge tension
T_{rated} (PIW) = Rated operating tension of belt
T_{ave} (PIW) = Average belt tension across belt at location of interest
BW (in) = Belt width
L (in) = Length in figure 4.2 (often conservatively assumed as centre roll length)
β (deg) = Troughing angle
B_m (PIW/ply) = Elastic modulus of belt
p = Number of belt plies
R (ft) = Curve radius

Normally the center and edge tensions are limited to the following portions of the rated operating tension of the belt. Buckling of the center of the belt is known to be bad for the life of the belt so a minimum tension limit is used. Excessive edge tensions are also known to reduce the life of the belt thus a maximum limit.

T_{ctr} = 0.05 x (T_{rated})
T_{edge} = 1.15 x (T_{rated})

To reduce the radius of the belt in difficult design situations, often the fatigue life of the belt is sacrificed and the following limits are used.

T_{ctr} = 0
T_{edge} = 1.20 x (T_{rated})

In certain instances, with C-profile design Sandwich Belts, the cover belt, also known as the outer belt, the edge limit may be increased to 130% of the belts rating if it is not run empty for long periods of time. The cover (outer) belt does not see the calculated tension at its edges when the sandwich is filled with material. The edge tension is much lower than the calculated value due to the shape the belt takes to conform to the material cross-section.

Where the cover belt is laid down on the carrying belt is known as the 'mouth' of the sandwich. See Figure 10.76. Special design considerations must be used here to make certain that the carrying belt, which becomes the cover (outer) belt in the curve, does not sag away from the curve, until the radial component of the cover belt tension can take effect. This can happen in the zone between the last upright idler and the first few inverted idlers in the curve.

Totally Enclosed Belts *Cont.*

Configurations of Sandwich Belts

Figure 10.78 illustrates some of the various profiles that are available for Sandwich Belt Systems. These profiles can be combined in one system in order to adapt to the required conveyor's path without transfers. The combinations are endless. Some of the more standard profiles are:

- L-profile
- Extended S-profile
- Extended C-profile
- C-profile
- "S"-profile
- Multi-"S" profile
- Short lower horizontal run
- Extended lower horizontal run
- Steep angle discharge
- Short upper horizontal run
- Extended upper horizontal run

Figure 10.79 illustrates a C-profile application that feeds a bin. The C-profile has found widespread use on board self-unloading ships as shown in Figure 10.80. The severe space restrictions on board make the C-profile Sandwich Belt ideal for elevating the cargo. Cargo is usually discharged by gravity onto a tunnel belt conveyor that transfers it to the Sandwich Belt, elevating the cargo to a lufting/slewing boom conveyor for discharging on shore. The tunnel transfer point is often eliminated by extending the C-profile Sandwich Belt's lower horizontal run and loading the bulk cargo directly onto it as shown in Figure 10.80.

Totally Enclosed Belts *Cont.*

Applications for Sandwich Belts

Due to the high lift capability of Sandwich Belts, they must often use ladders and platforms for maintenance and operator access, along the steep angle incline. A novel way that has been used to supply easier access is shown in Figure 10.83. A mobile maintenance platform was installed along both sides of the Multi-'S' Sandwich Belt. This proved a real benefit to maintenance and operating personnel in performing their duties.

Sandwich belts have proven very versatile in elevating material up steep inclines or down steep declines even to the vertical. They can range from light duty units handling just up to a 100 tph vertically as illustrated in Figure 10.84, to heavy duty units shown in Figure 10.87 handling minus 10 inch primary crushed copper ore at 4400 tph in an open pit mine application up a 35.5° incline, to high lifts shown in Figure 10.81 to high capacity C-profile units with 120 inch wide belts, in self-unloading ship applications as shown in Figure 10.80, and elevating 11,000 tph of iron ore pellets at 1,200 fpm for discharging.

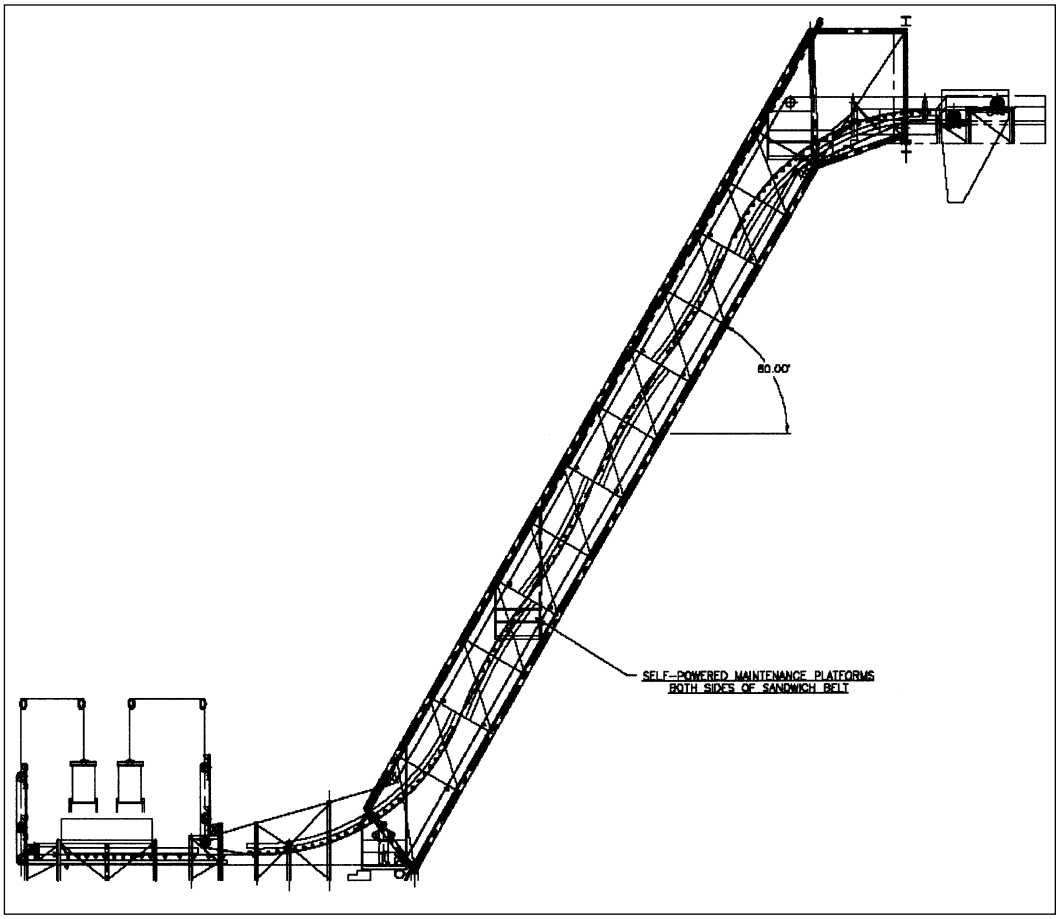

Figure 10.83
Mobile maintenance platform on a multi-"S" type Sandwich Belt

Conveyor Belt Cleaning Equipment *Cont.*



Figure 11.2
Cupped belt



Figure 11.3
Supported belt

Structural Considerations

The mounting of belt cleaners is often made difficult or less than ideal because the basic spacing and support requirements have not been considered in sizing of the chute or conveyor structure. Because there are a wide variety of belt cleaner designs available it is recommended that the belt cleaner manufacturer be consulted during the design of a system so that adequate structural support is provided.

Blade Width

Some belt cleaners are made with blades that are less than the full width of the belt while others are designed to cover the entire width of the belt. These differences in design and construction offered by manufacturers allow for variations in belt tracking, bulk material loading and customer preferences. See table 11.4.

Table 11.4
Minimum blade coverage (inches) for conveyor belt cleaners

Belt Width (inches)	Minimum Blade Coverage (inches)
18	12
24	16
30	20
36	24
42	28
48	32
54	36
60	40
72	48
84	56
96	64
108	72
120	80

Bulk Material Characteristics and Belt Cleaning Considerations

The material to be cleaned from the belt affects the selection of the belt cleaner system so it is important to be able to define and classify the bulk material. It is not unusual for the quality of the bulk material to change over time, when sources are changed or specifications varied. These changes can have a dramatic effect on the ability of a cleaning system to function. Therefore, it is important to be able to classify the properties and characteristics of the bulk material. CEMA Standard 550 details a classification system that, when used with sieve analysis and moisture content, produces a reasonable description of the bulk material. The basic elements of the classification system are Size, Flowability, Abrasiveness and Miscellaneous characteristics.

Slider Beds *Cont.*

Definition

A slider bed is a support under the carrying side of the conveyor belt that is designed to handle the sliding load of the belt and the bulk solid.

CEMA Recommendation

- Contact a CEMA member for a review of your application to see if a slider bed is an appropriate option.
- When using slider beds consider the additional horsepower that may be required.

New Graphic

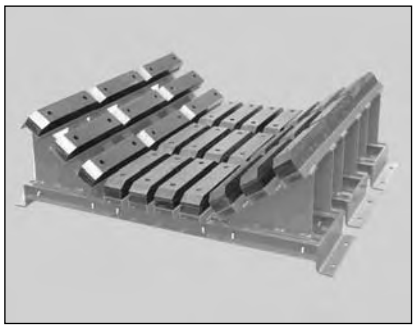

Figure 11.45
Slider bed



Figure 11.46
Slider bed in use

There are numerous variations of the slider bed used for edge support. Most of the designs utilize a low friction material such as UHMW for the belt to slide on. In some cases other materials are used to meet special requirements such as anti static, high speed belts or chemical resistance.

One heavy-duty application for slider beds is in wood yards in debarking and chipping applications. In this application the presence of sharp limbs and the abundance of water make the slider bed a better choice as long as it is heavy duty enough to withstand the impact and the belt is viewed as sacrificial.

The power requirements for full slider beds and for edge support applications differ significantly. The power requirements for full slider beds can be estimated using the method for impact beds described in CEMA Standard 575-2000 or the latest version. When the slider bed technique is applied to edge sealing it is common to use rollers in combination with the slide surfaces on the edge. In this case the power requirements are dependent more upon the force generated by the sealing system. See Chapter 6 for the calculation of belt tension resulting from the use of edge sealing slider beds.

Combination Impact, Slider and Roller Beds

Manufacturers offer a wide variety of combination of impact and edge sealing systems for specific applications.

Definition

A Combination Bed is a support system under the carrying side of the conveyor belt that is designed to handle the sliding load of the belt and the bulk solid.

CEMA Recommendation

- Contact a CEMA member for a review of your application to see if a combination system is an appropriate option
- When using slider beds consider the additional horsepower that may be required.

Skirtboards

To retain the material as it settles on the belt after it leaves the transfer chute and to settle any dust particles back onto the belt, skirtboards are often necessary. These skirtboards usually are an extension of the sides of the lower chute and extend roughly parallel to one another for some distance along the conveyor belt. The skirtboards normally are made of steel with high resistance to abrasion. Ceramic plates are increasingly used as wear liner on skirtboards, due to their improved sliding and resistance.

The lower edges of the skirtboards are positioned some distance above the belt. The gap between the skirtboard bottom edge and the belt surface is sealed by a flexible elastomer sealing strip, attached or clamped to the exterior of the skirtboard.

To avoid the entrapment of material lumps between skirtboards, sealing strips, and belt, the skirtboards should be installed so they taper outwards in the direction of belt travel (horizontally) as well as taper upwards providing increased clearance from the belt (vertically). The gradual widening, 1/2 to 1 inch over the entire length of the transfer point, provides a relief mechanism for any material that could become entrapped and risk gouging or abrading the moving belt. Rather than being pinched between the skirtboard or lining and the belt, the lumps of material are pulled free by belt motion. It is critical that these openings form a straight line, without any jagged or saw-toothed pattern, which could capture material. Commonly used proportions and details of skirtboards and elastomer sealing strips are as follows.

SPACING OF SKIRTBOARDS

The maximum distance between skirtboards customarily is two-thirds the width of a troughed belt, (0.67BW). However, it is desirable, when possible, to reduce this spacing to one-half the width of the troughed belt (0.5BW) especially for free-flowing materials, such as grain.

On flat belts, depending on how well the belt is trained centrally, how well it is supported by idlers or a loading plate beneath the belt, and how effectively the edge sealing system is maintained, the space between the skirtboards may be only a few inches less than the belt width. Such spacing commonly is used when handling damp or prepared molding sand, or similar materials with minimal slump upon leaving the end of the loading area.

LENGTH OF SKIRTBOARD EXTENSION BEYOND LOAD ZONE

Usually, when the loading is in the direction of the troughed belt travel the skirtboard length is a function of the difference between the velocity of the loading material, at the moment the material reaches the belt, and the belt speed. For the installation where this difference is small, the length of the skirtboard can safely be 2 ft for each 100 fpm of belt speed, with a minimum length of 3 ft. Otherwise, the skirtboard should be long enough to allow the load to settle into the profile it is to maintain for the rest of its conveyor journey. The need for a dust suppression or collection system may require an increase in the length of skirtboard for use to establish a plenum.

Where belt conveyors with trippers are arranged with inclined loading sections, the skirtboards should extend to the bend pulley or to the first of the group of idlers at the convex vertical curve. This is done to maintain the shape of the material load on the belt, right up to the beginning of the curve. Skirtboards preferably should terminate above an idler rather than between idlers.

In cases where the material tends to roll backwards, it is recommended that the skirtboards extend along the entire length of the conveyor. The penalty for increasing the length of skirtboards is the additional maintenance of wear liners and sealing strips and the slight increase of power consumption due to the friction of the sealing system.

Skirtboards *Cont.*

HEIGHT OF SKIRTBOARDS

The height of skirtboards must be sufficient to contain the material volume as it is loaded on the belt. Tables 12.36 and 12.37 list accepted, minimum skirtboard height for 20, 35° and 45 degree three-equal-roll troughing idlers. The requirement to control airborne dust driven off by the forces of loading material may require an increase in the height of skirtboard. In addition these systems may require the lengthwise extension of the skirtboard and its cover, as well as the use of mechanical systems for dust suppression and/or collection. The cross-sectional area of the skirtboard for dust control is often calculated on 250 fpm or less exit air velocity.

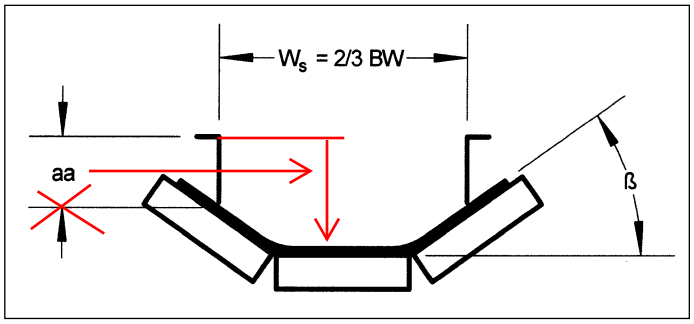

Figure 12.35
Minimum skirtboard height and width

Table 12.36
Minimum uncovered skirtboard height for 20° three equal roll troughing idler

β = 20° Three Equal Roll Troughing Idlers									
Belt Width	aa (in) = Minimum Uncovered Skirtboard height								
	Lump Size, inches								
(inches)	2*	4	6	8	10	12	14	16	18
18	5.0	5.0	5.0						
24	5.5	5.5	6.0	6.6					
30	5.8	6.3	7.0	7.6	8.3				
36	6.7	7.3	8.0	8.6	9.3	10.0			
42	7.7	8.3	9.0	9.6	10.3	11.0	11.6		
48	8.7	9.3	10.0	10.6	11.3	12.0	12.6	13.3	
54	9.7	10.2	11.0	11.6	12.3	13.0	13.6	14.3	15.2
60	10.7	11.3	12.0	12.6	13.3	14.0	14.6	15.3	16.2
72	12.7	13.3	14.0	14.6	15.3	16.0	16.6	17.3	18.2
84	14.7	15.3	16.0	16.6	17.3	18.0	18.6	19.3	20.2
96	16.7	17.3	18.0	18.6	19.3	20.0	20.6	21.3	22.2

** For material that is all fines use skirtboard heights in 2-inch lump size column.*

Table 12.37
Minimum uncovered skirtboard height for 35° and 45° three equal roll troughing idlers

β = 35° and 45° Three Equal Roll Troughing Idlers									
Belt Width	aa (in) = Minimum Uncovered Skirtboard height								
	Lump Size, inches								
(inches)	2*	4	6	8	10	12	14	16	18
18	7.0	7.0	7.0						
24	7.5	7.5	8.0	8.6					
30	8.8	8.8	9.5	10.1	10.8				
36	9.7	10.3	11.0	11.6	12.3	13.0			
42	11.2	11.8	12.5	13.1	13.8	14.5	15.1		
48	12.7	13.3	14.0	14.6	15.3	16.0	16.6	17.3	
54	14.7	14.8	15.5	16.1	16.8	17.5	18.1	18.8	19.7
60	15.7	16.3	17.0	17.6	18.3	19.0	19.6	20.3	21.2
72	18.7	19.3	20.0	20.6	21.3	22.0	22.6	23.8	25.0
84	21.7	22.3	23.0	23.6	24.3	25.0	25.6	27.2	28.7
96	24.7	25.3	26.0	26.6	27.3	28.0	28.6	30.6	32.5

** For material that is all fines use skirtboard heights in 2-inch lump size column.*

Wear Liners

Transfer chutes should be lined on flow surfaces with a material providing good abrasive wear resistance so that this liner, not the chute itself, is the sacrificial element. The type of liner material must be compatible with the bulk material being handled. Depending on cost of lining material as well as ease of attaching to the chute walls, the selection is almost always some sort of compromise.

The Table below shows a range of materials currently used as chute linings and some of the characteristics of the materials. This table is taken from MHEA's "The Design of Transfer Chutes & Chute Linings", with minor revisions and the following text is also based primarily on that included in MHEA.

Table 12.40 *Characteristics of wear liners*

Lining Material	Initial Cost	Sliding Abrasion Resistance	Impact Resistance	Temperature Resistance	Low-Friction Quality	Ease of Fabrication
Alumina Tiles	High	***	*	***	**	*
AR Plate	Low	**	*	**	-	*
Carbon Steel	Medium	**	*	**	-	***
Chromium Clad-plate	High	***	***	**	-	*
Corrosion Resistant Stainless Steel	Medium	*	*	**	**	*
High Cr Cast Iron Tiles	High	***	***	**	**	**
Mild Steel	Low	*	*	**	-	***
Polyurethane	High	**	***	-	-	***
Quarry Tiles	Low	*	-	*	*	**
Rubber	High	*	***	-	-	**
Stainless Steel - polished	High	*	*	***	**	**
UHMW	Medium	*	-	-	***	***
Vitrified Tiles	Low	**	-	**	**	***

- Poor *** Good** **** Very Good** ***** Excellent**

Alumina Tiles

Alumina ceramic tiles are widely used to combat sliding abrasion in chutes and hoppers where a measure of impact resistance is an added requirement. This product is particularly suited to coal handling. High Alumina Ceramic is a tough wear resistance material with aluminum oxide of 85% to 95%. Hardness is 9.0 Moh (second only to diamond which is 10 Moh). These tiles have no water absorption and high chemical resistance. Fixing is usually by epoxy and specialists to ensure correct bonding and alignment should carry out the tile installation.

AR Plate

There are many branded abrasion resistant low alloy steels available offering resistance to both impact and abrasive wear. These are mostly of low Nickel/Chromium/Molybdenum composition with hardness in the range 300 to 500 HB. These steels are consequently much more difficult to fabricate and form into the more complex chutes compared with mild steel and whilst the raw material cost may range from that of mild steel plus 50% to 100%, the fabrication cost can be substantially more. In view of the difficulty and costs of fabrication, the use of alloy steel liners is often limited to flat impact areas where its benefits can best be exploited at minimal cost or on areas where flat plate work or tiles can be arranged with fixing by countersunk bolts or welded studs. The alloy steels offer similar friction properties to mild steel but are somewhat less prone to rusting and corrosive build-up.

Carbon Steel

Carbon steel plate is available in a range of qualities (0.30%C to 0.50%C) offering improved hardness from 150 HB to 250 HB and hence better wear resistance than mild steel. The material is slightly more difficult to form and fabricate than mild steel and likely to cost from 25% to 50% more.

Feeders *Cont.*

There are several components required for calculation of the total belt tension for a feeder. They can be classified into the following groups:

1. Vertical Load On The Feeder.
2. Force To Shear The Bulk Material.
3. Skirt Friction Resistance.
4. Force To Elevate The Bulk Material.
5. Force To Move The Belt: Idlers, Pulleys And Accessories Resistance's.

The force to elevate the material and move the belt over the standard components is given in Chapter 6 as the Basic case. The vertical load, force to shear the material and skirt friction resistance in the hopper will be treated as special cases for feeder belt tension calculations.

Vertical Load and Material Shearing Resistance

The vertical load on the area above the feeder has been proven to vary from the initial load when there has been no flow for a period of time and the subsequent load when material flow has begun. The surcharge loads on the material shear plane created by the flow limiting device at the exit of the feeder must be known to estimate the force to shear the material. It is important to remember that for the total load on the belt with in the hopper section the weight of the material below the shear plane and between the skirtboards must be included.

When first a hopper is first filled the surcharge load almost entirely vertical. Once the material as flowed from the hopper stress fields are established that dramatically reduce the surcharge load. It is common for the initial surcharge load to be several times as large the once flow is established. Therefore, keeping material in the hopper reduces feeder power requirements. There are other advantages to keeping material in the hopper such as reducing impact on the belt feeder and structure. Since it is inevitable that the hopper will be empty numerous times during the life of the equipment it is recommended that feeder horsepower requirements be based on the initial surcharge load or peak load, Q_i. Q_i should be calculated assuming the feeder has a full hopper using the equation following Figure 12.59.

To estimate Q it is necessary to determine the arching angle, ϕ, at the base of the hopper at the shear plane and the materials effective coefficient of internal friction, tan (ϕ). For free flowing bulk solids the angle of repose can be used as an estimate of the arching angle as equal to the angle of internal friction.

The force to shear the material as it exits the hopper of a feeder is:

$F_Q = \mu \times Q$

Where μ is the friction coefficient based on the internal angle of friction of the material and the hopper geometry. Since most belt feeders are horizontal or slightly declining μ can be conservatively assumed to be: $\mu = \tan(\phi)$ The coefficient of internal friction

Where;
ϕ = Angle of internal friction of the bulk solid on the shear plane

To estimate the surcharge load it is necessary to determine the mass of material that is effectively loading the shear plane. This is done by estimating the volume above the shear plane that would be contained under the arch stress field that forms in the material under flow conditions. The arching angle, ϕ, can be determined through shear cell testing and hopper geometry. Conservative values for ϕ for free flowing bulk solids are 70 to 80 degrees. The shearing force for simple feeder designs handling free flowing bulk solids can be estimated by calculating the volume of surcharge material above the shear plane, calculating the weight and applying the coefficient of internal friction of the material. For complex hopper or feeder designs consult a CEMA member company for advice.

Feeders *Cont.*

Skirtboard Resistance

The skirtboard resistance consists of two components. The portion inside the hopper section and then any skirted length beyond the hopper section. In both cases the pressures on the skirts are assumed to be normal to the skirt surface, behaving like hydrostatic loads. Only the resistance in the hopper section is given in this section since the skirt seal resistance outside the hopper load zone is considered in chapter 6. a reasonable approximation is made using the average lengths and areas of the shear plane and the skirtboard walls.

Calculate the hydrostatic pressure. $P_V = P_N \bullet K_a$ where:

$$P_N = \left(\frac{Q}{L_h \left(\frac{b_1 + b_2}{2} \right)} \right) \quad \text{and} \quad K_a = \left(\frac{1 - \sin\phi}{1 + \sin\phi} \right)$$

The skirtboard resistance inside the hopper is the hydrostatic pressure, P_v , times the skirtboard area times the friction factor between the bulk material and the skirtboard. The skirtboard resistance is then estimated as a Tension:

$$T_s = 2\left(P_V \cdot L_h \left(\frac{y_1 + y_2}{2} \right) \mu_s \right)$$

The factor 2 is for the 2 sides of the hopper. The end wall is not considered.

Limiting Conditions

The product of the coefficient of friction between the belt times the weight of the material between the skirt plates plus the surcharge load must be greater than force to shear the material at the hopper outlet plus the skirtboard resistance or the belt will not be able to withdraw material. While this seems obvious it is often overlooked. The coefficient of friction between the belt and the bulk material can be measured with the same test procedures used to determine the internal friction and wall friction angles or it can be estimated by the belt manufacture for the application. Using the factor K_a as a modifier of the hydrostatic pressure is a good approximation for free flowing granular material. As the material flowability decreases and particle size increase the calculation becomes more conservative.

Basic Power Requirement

From chapter 6 the basic equation for the horsepower required at the drive of a belt conveyor is the effective tension, T_e, required at the drive pulley to propel or restrain the loaded conveyor at the design velocity. The feeder drive should be selected based on the design speed of the feeder.

$$hp_{feeder} = \frac{T_{e\text{-}feeder} \times V}{33{,}000}$$

T_e is the sum of several individual components of belt tension. For belt feeders it is important to include the resistance from the force to shear the material, the skirtboard resistance, the force to elevate the material and the main resistances of conveyor, (T_e calculation for Basic Conveyors in chapter 6). In addition to these items there may be other accessory items, skirtboard seals, plows, belt cleaners and other accessories, all of which should be included because on short belts they can have a significant effect.

$$T_{e\text{-}feeder} = T_Q + T_s + \left[W_m \cdot H + .04\left(2W_b + W_m\right) \cdot L \right] + T_{acc}$$

Discharge Trajectories *Cont.*

HORIZONTAL, INCLINED AND DECLINED CONVEYOR BELT TRAJECTORIES

Angular Tangent Direction

The angular direction of the trajectory is determined by the forces acting on the material at its center of mass. Were it not for the effect of gravity, the median line of the trajectory would be a straight line. It is this straight line tangent to a circle, the radius of which is the distance from the pulley center to the center of gravity of the material load-shape cross section that determines what angular direction the trajectory will take. See Figures 12.69 through 12.75, which are provided below.

Fundamental Force-Velocity Relationships

Fundamentally, if the tangential velocity is *Vs* ft per second (fps), if g is the acceleration due to gravity (32.2 ft per sec^2); *r* is the radial distance in feet from the center of the pulley to the center of mass (i.e., the cross-sectional center of gravity of the material load shape); and *W* is the gravity weight force of the material acting at the center of mass, then the centrifugal force acting at the center of mass of the material is as follows:

$$\text{Centrifugal Force} = \frac{W \cdot V_s^2}{g \cdot r_s}$$

When this centrifugal force equals the radial component of the material weight force, the material will no longer be supported by the belt and will commence its trajectory. At just what angular position around the pulley this will occur is governed by the slope of the conveyor at the discharge pulley, outlined in the following three cases.

Belt Trajectories

Where:

a_1 = the distance from the belt to the center of gravity of the load shape in inches

cg = center of gravity of the cross section of the load shape

et = the point where the material leaves the belt

g = acceleration of gravity in feet per second per second, or ft per sec2

h = the distance from the belt to the top of the load shape in inches

r_p = radius in feet of the pulley

r_s = radius in feet from the center of pulley to the cross-sectional center of gravity of the load shape

t = thickness of the belt in inches

V = the belt speed, fpm

V_s = tangential velocity, fps, of the cross-sectional center of gravity of load shape

γ = angle, in degrees, between the vertical centering, through the pulley, to the point, e_t, where the material starts its trajectory

ϕ = angle, in degrees, of incline of the belt conveyor to the horizontal

Horizontal Belt Conveyor Trajectories

If the belt conveyor is horizontal to the discharge pulley, there are two conditions to consider:

1. If the tangential speed is sufficiently high (that is, when the centrifugal force is equal to or greater than W), the material will leave the belt at the initial point of tangency of the belt with the pulley:

$$\frac{V_s^2}{g \cdot r_s} \geq 1.00$$

Discharge Trajectories *Cont.*

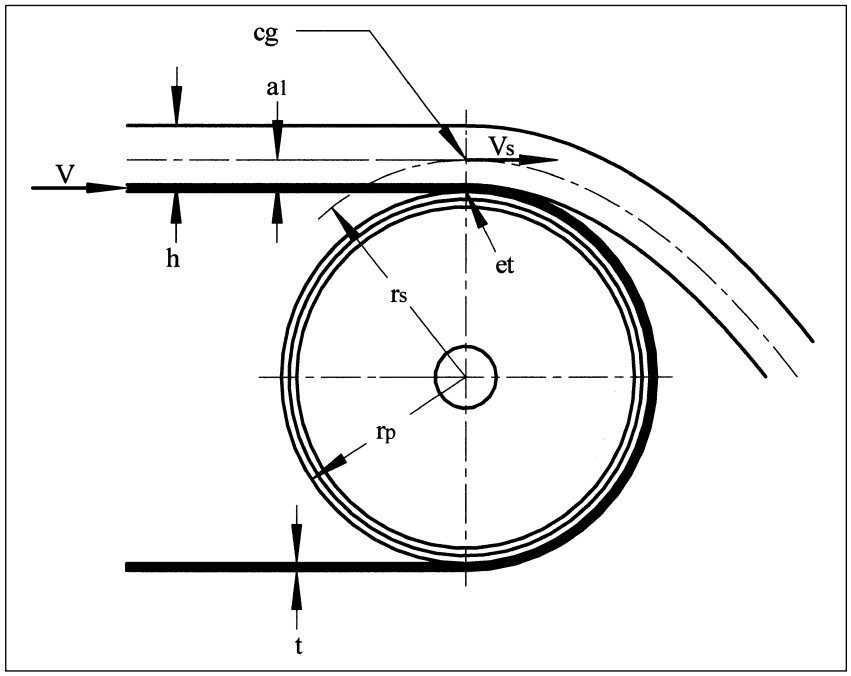

Figure 12.69
When the belt speed is sufficiently high, the material leaves the belt at the point of tangency of the belt with the pulley. Belt speed, V, is used for plotting the trajectory.

2. If the tangential speed is not high enough for the material to leave the belt at the initial point of tangency then the material will follow part way around the pulley for an angular distance :

$$\frac{V_s^2}{g \times r_s} < 1.0$$

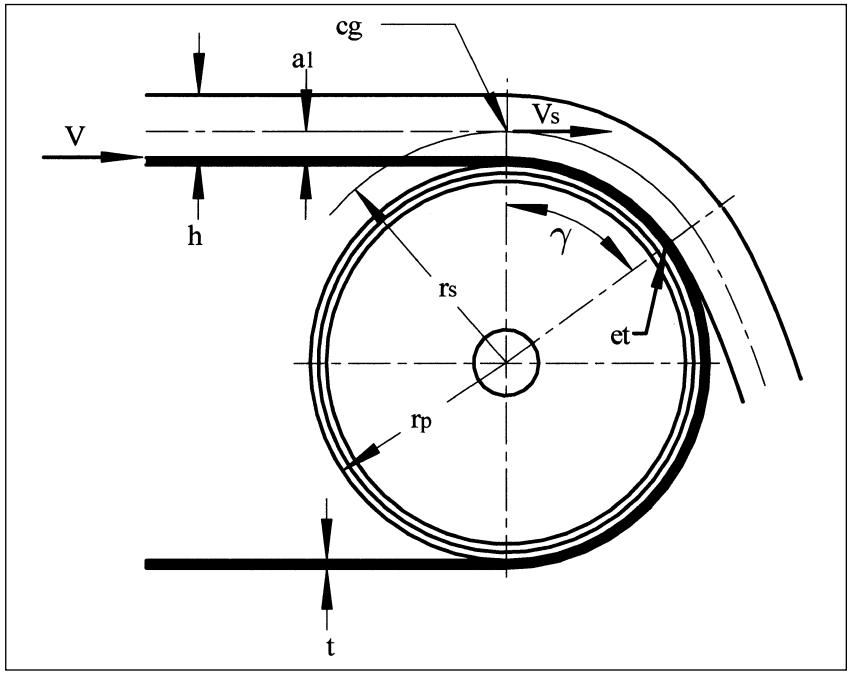

Figure 12.70
When the belt speed is not high enough, the material will follow part way around the conveyor. V_s is used for plotting the trajectory.

Discharge Trajectories *Cont.*

Inclined Belt Conveyor Trajectories

For a belt inclined to the discharge pulley, there are four conditions to consider:

1. If the tangential speed is sufficiently high, the material leaves the belt at the initial point of tangency of the belt and pulley:

$$\frac{V_s^2}{g \times r_s} > 1.0$$

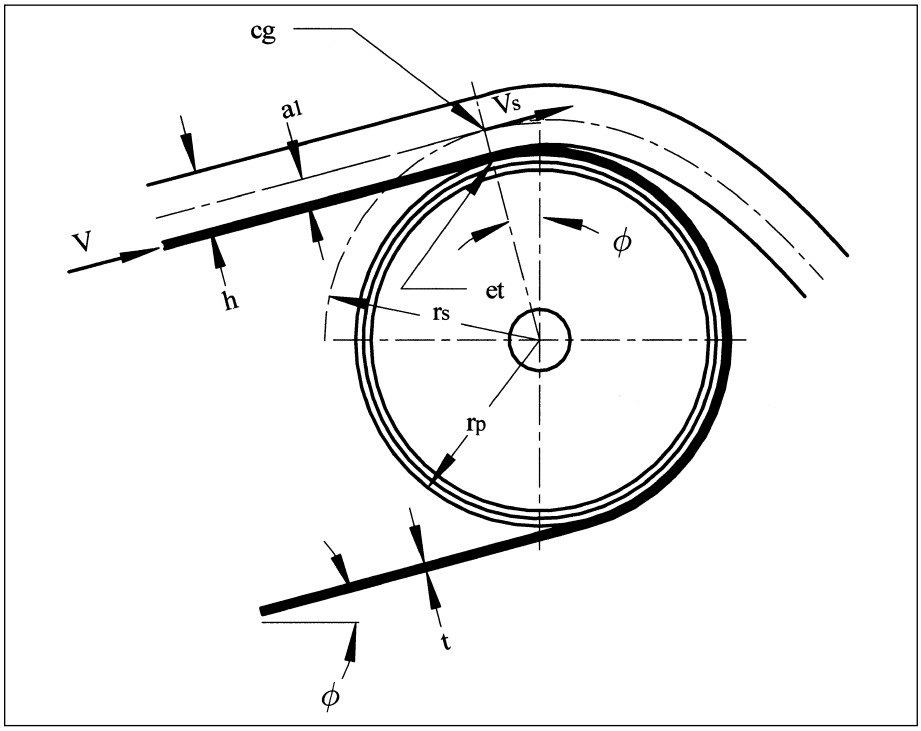

Figure 12.71
When, in an inclined conveyor, the tangential speed is high, the material will leave the belt at the point of tangency of the belt and pulley.

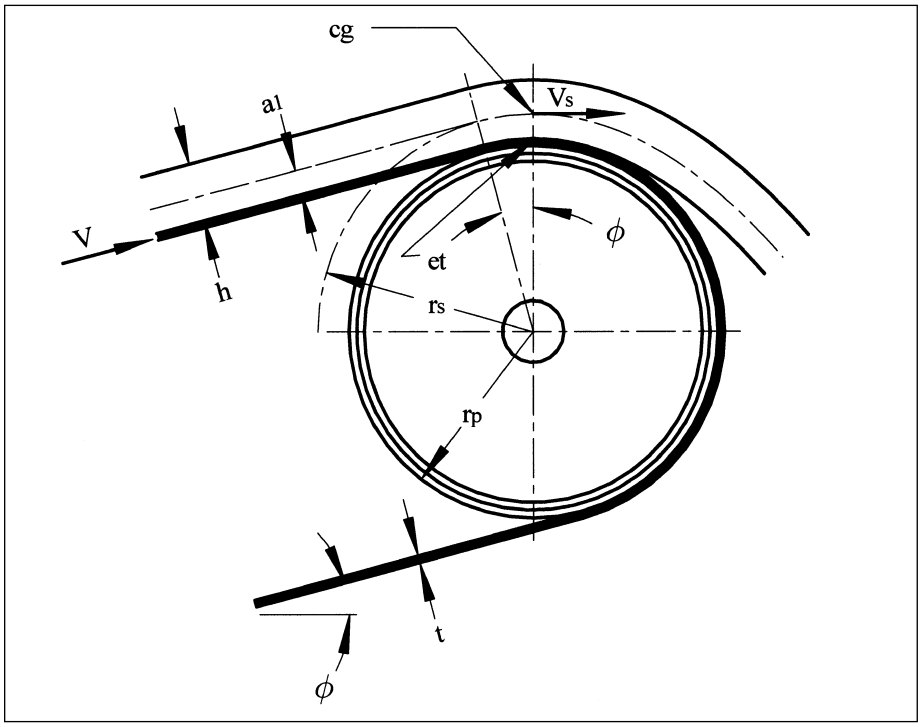

Figure 12.72
When, in an inclined conveyor, the tangential velocity is equal to a specific value such that

$$\frac{V_s^2}{g \times r_s} = 1.0$$

the material will leave the belt at the vertical centerline of the pulley. Vs is used for plotting the trajectory.

Discharge Trajectories *Cont.*

4. If the tangential speed is sufficiently low, or when $V_s^2/gr_s < \cos \phi$, the material will travel partially around the pulley an angular distance, beyond its top center to the point where $V_s^2/gr_s < \cos \gamma$. This is shown in Figure 12.73,

Declined Belt Conveyor Trajectories

If the belt conveyor is declined toward the discharge pulley, there are two conditions to consider:

1. If the tangential speed is sufficiently high, or when, the material will leave the belt at the initial point of tangency of the belt and pulley, as shown in Figure 12.74.
2. If the tangential speed is insufficient to make the material leave the belt at the initial point of tangency of the belt and pulley, the material will follow partly around the pulley until, as shown in Figure 12.75.

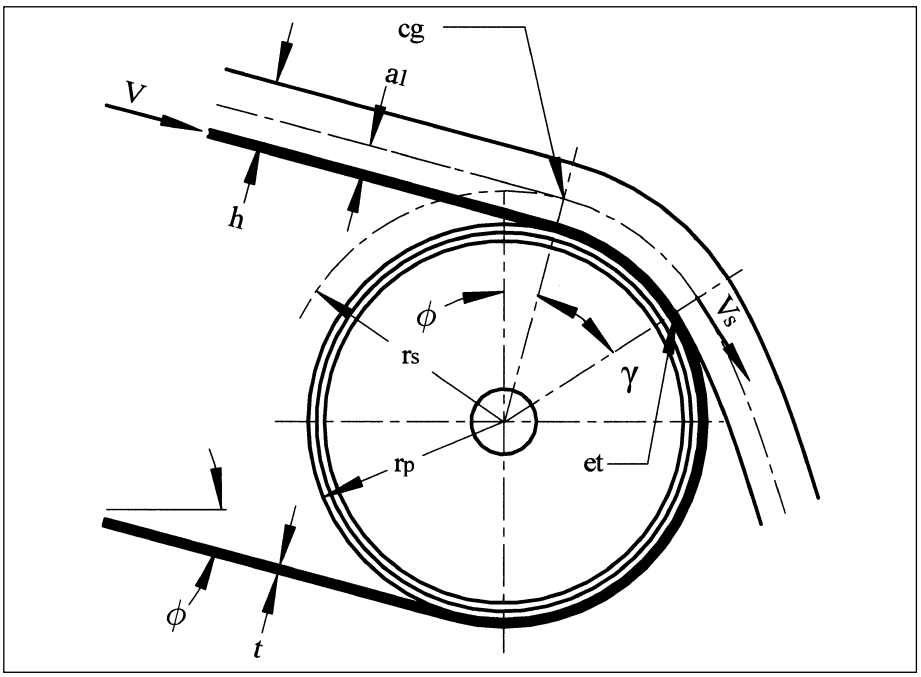

Figure 12.75
When, in a declined conveyor, the tangential velocity is low (see text), the material will follow part way around the end pulley. V_s is used for plotting the trajectory.

PLOTTING THE TRAJECTORY

Before the trajectory of the discharged material can be plotted, it is necessary to calculate the value of r in order to solve the expression: It is also necessary to find the height of the flattened load of material on the belt, so that the upper limit of the material path can be plotted.

If:

a_1 = height in inches above the belt surface of the center of gravity of the cross-section shape of the load, at the point where the pulley is tangent to the belt

h = height in inches above the belt surface of the top of the load, at the point where the belt is tangent to the pulley

r_s = radius in feet from the center of the pulley to the center of gravity of the circular segment load cross section

V_s = speed of material at its center of mass where,

1. V_s = velocity of the belt if discharge point is at tangency of the belt-to-discharge pulley
2. V_s = velocity of material based upon the rotational speed of the material at its center of mass for all other conditions of discharge after the point of belt-to-discharge pulley tangency.

$$\text{I.E. } \frac{V_s^2}{g \times r_s} \geq 1.0$$

Discharge Trajectories *Cont.*

Measurement of the Time Interval

The determination of the interval of time along the tangent line depends upon the calculated tangential velocity, V_s (at radius r). It will be helpful, in making the layout of the trajectory diagram, to recognize that the distance increments for each l/20th of a second of time correspond to 0.6 inches for each foot per second of the tangential velocity, V_s .

For example, if the calculated tangential velocity, V_s, is l fps, lay out the time intervals on the tangent line from point et at 0.6 inch; if the tangential velocity is 2 fps, lay out the intervals at 1.2 inches; if 3 fps, lay out the intervals at 1.8 inches; etc. If the tangential velocity is some fraction of a foot per second, multiply this fraction by 0.6 inch and lay out the intervals accordingly.

1. Start the layout of time intervals on the tangent line from point et , the start of the line tangent to the circle of radius r. Number each interval consecutively, 0 for the point of tangency (point e_t), 1 for the first 1/20th second, 2 for the next, and so on.
2. Draw a series of parallel vertical lines downward a suitable distance from each numbered time interval and directly on the tangent line (except the zero number).
3. Lay out on these vertical lines the corresponding distance of fall from the tangent line. To do this, measure vertically downward from each numbered point on the tangent line.
4. Draw a smooth curve through the fall points. This is the median line of the trajectory of the material.

Limits of the Trajectory Path

Having established the median line of the trajectory, lay out a top-of-the-trajectory line with the distance $(h - a_1)$, using Table 12.76. Distance $(h - a_1)$ is the radius of partial circles drawn above and around each fall point. The top limit of the trajectory of normal materials will be a smooth curve drawn tangent to these partial circles. The value of h must be to the same scale as the diagram.

Similarly, the underside limit of the material path should be a smooth curve, tangent to partial circles drawn below and around each fall point. The circles will have a radius equal to the value of a_1, which also must be to the same scale as the diagram. For the individual trajectories of single large lumps, use r as the distance from the center of the lump to the center of the pulley. Calculate the tangential velocity, *Vs*, of the lump as follows:

$$V_s = \frac{2 \cdot \pi \cdot r \cdot (\text{rpm of end pulley})}{60}$$

The lateral dimension, or width, of the trajectory path of the material will be very close to the length of the circular segment chord *x* in Figures 12.63 and 12.64. This is approximately [BW - 0.055b - 0.9 inch] for troughed belts, or [BW - 2(0.055b + 0.9 inch)] for flat belts, where BW is the belt width in inches.

The lateral dimension, or width, of the material path is affected by the height of fall and the characteristics of the material. With respect to long falls below the discharge pulley, light, fluffy materials or large lumps mixed with fines, allowance for aberrations in the trajectory limits of such materials must be made when designing discharge chutes.

On slow belts, such as feeders, the load may slough off at the angle of repose in intermittent surges rather than as a continuous stream.

When evaluating the function $\frac{V_s^2}{g \times r_s}$ and the result is < 1.0 when using belt speed but > 1.0 when using $V_{\text{center of gravity}}$ the result is > 1.0. This is a special condition where it is recommended to revise the belt speed so that $\frac{V_s^2}{g \times r_s} = 1.0$

Discharge Trajectories *Cont.*

Example #6 Declined Conveyor where: $\frac{V_s^2}{g \times r_s} > 1.0$

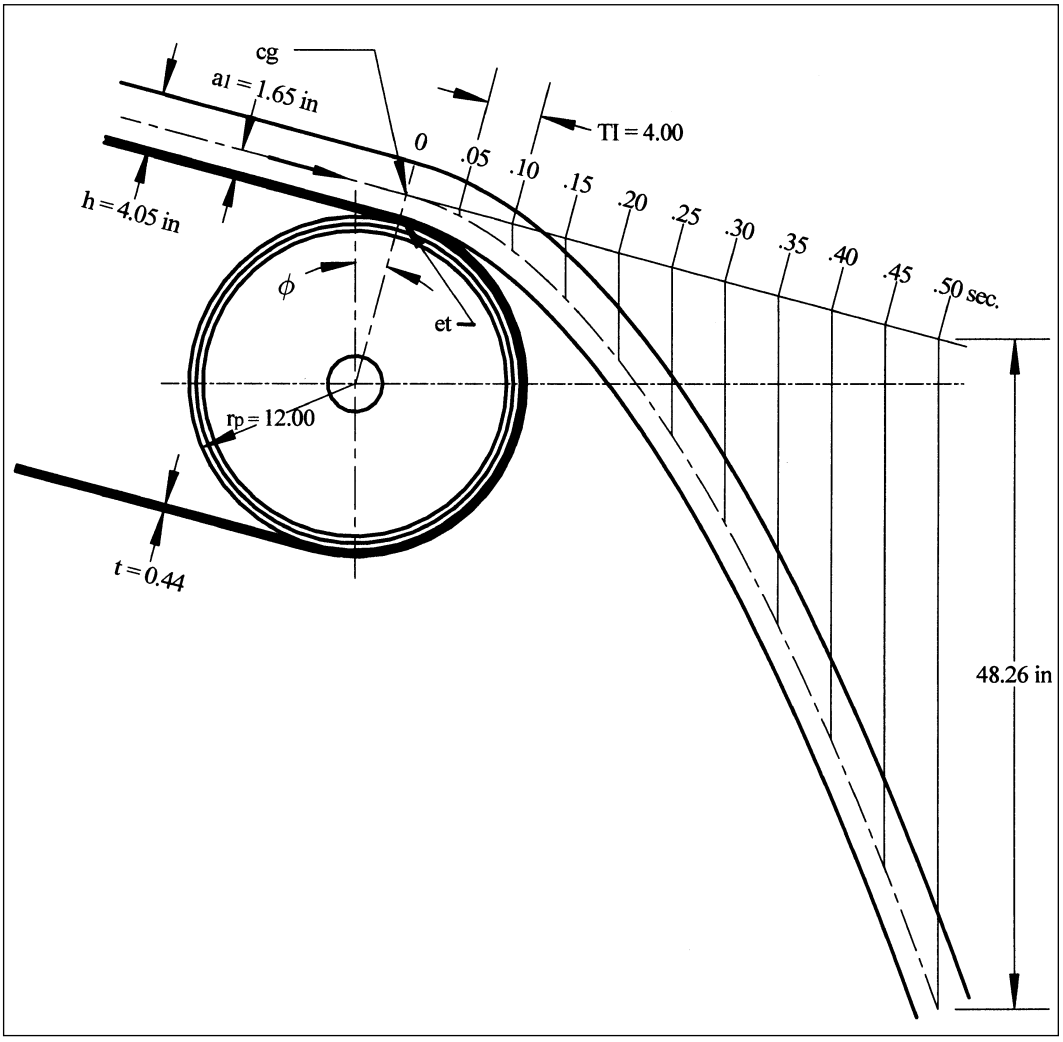

Figure 12.82
Discharge Trajectory Example #6

Incline/Decline: = Decline, $\phi = 15°$
Belt Width, BW (in) = 30
Belt Thickness, t (in) = 7/16
Belt Speed, V (fpm) = 400
Pulley Radius, r_p (in) = 12.00
Idler Configuration: = Three equal roll 20° standard troughing idlers
Surcharge Angle: = 20°
h (in) = 4.05 From Table 12.65
a_t (in) = 1.65 From Table 12.65

Belt Drive Attributes

What are the requirements of a belt conveyor system? The belt designer must catalog the belt conveyor requirements in order to select and match the drive system features.

SIZE

Certain drive components are available and practical in different size ranges. For this discussion, we will assume that belt drive systems range from fractional horsepower to multiples of thousands of horsepower. Small drive systems are often below 50 horsepower. Medium systems range from 50 to 1,000 horsepower. Large systems can be considered above 1,000 horsepower. Division of sizes into these groups is entirely arbitrary. One should resist the temptation to over-motor or under-motor a conveyor to enhance standardization. An over-motored drive results in poor efficiency and the potential for high torques, while an under-motored drive could result in destructive over-speeding on regeneration, the failure to start a load, or overheating on loading with shortened motor life.

TORQUE CONTROL

Belt designers try to limit the starting torque to no more than 140 percent of the running torque. The limit on the applied starting torque is often the limit of rating of the belt carcass, belt splice, pulley design, or shaft deflections. On larger belts and belts with optimized sized components, torque limits of 110 percent through 125 percent are common. Besides a torque limit, the belt starter may be required to limit torque increments that would stretch belting and initiate traveling waves. An ideal starting control system would first apply a pretension torque to the belt at rest, up to the point of breakaway, or movement of the entire belt; and then a torque equal to the movement requirements of the belt with load, plus a constant torque to accelerate the inertia of the system components from rest to final running speed. This would minimize system transient forces and belt stretch. Different drive systems exhibit varying ability to control the application of torques to the belt at rest and at different speeds. Also, the conveyor itself exhibits two extremes of loading. An empty belt normally presents the smallest required torque for breakaway and acceleration, while a fully loaded belt presents the highest required torque. A conveyor drive system must be able to scale the applied torque from a 2:1 ratio for a horizontal simple belt arrangement, to a 10:1 range for an inclined or complex belt profile. Classically, stopping the conveyor involves the removal of motive driving force, while allowing the conveyor to drift to a stop. Some complex conveyor profiles or dynamic traveling wave situations require drive torque control during stopping. The belt drive torque is reduced at a controlled rate as the conveyor is driven to stop over a period longer than the normal drift time.

THERMAL RATING

During starting, running, and stopping, each drive system dissipates varying quantities of waste heat. The waste heat may be dissipated in the electrical motor, the electrical controls, the couplings, the speed reducer, or the belt braking system. The thermal load of each start is dependent on the amount of belt load and the duration of the start. The designer must fulfill the application requirements for repeated starts after running the conveyor at full load. Typical conveyor belt starting duties vary from 3 to 10 starts per hour equally spaced, or 2 to 4 starts in succession. Repeated starting may require the de-rating or over-sizing of system components. There is a direct relationship between thermal rating for repeated starts and costs for each drive system.

VARIABLE SPEED

Some belt drive systems are suitable for controlling the starting torque and speed, but only run at constant speed. Some belt applications require a drive system that can run for extended periods at less than full speed. This is useful when the drive load must be shared with other drives, when the belt is used as a process feeder for rate control of the conveyed material, when the belt speed is optimized for the haulage rate and operating life, when the belt is used at slower speeds to transport supplies, or when the belt is run at slow inspection or inching speed for maintenance purposes. The variable speed belt drive will require a control system based on some algorithm to regulate operating speed.

Belt Conveyor Drive Arrangement

Belt conveyor drive equipment normally consists of a motor, speed reduction equipment, and drive shaft, together with the necessary machinery to transmit power from one unit to the next. The simplest drive, using the minimum number of units, usually is the best. However, economic reasons may dictate the inclusion of special-purpose units in the drive. These special-purpose units may be required to modify starting or stopping characteristics, to provide hold-back devices, or perhaps to vary the belt speed. The final selection and design of a conveyor drive arrangement is influenced by many factors, including the performance requirements, the preferred physical location, and relative costs of components and installation.

SPEED-REDUCTION MECHANISMS

The illustrations in Figures 13.19 through 13.28 show most of the belt conveyor drive equipment assemblies currently in common use. The following comments apply to these figures:

Figure 13.19: Gear motor directly connected by flexible coupling to drive shaft, is a simple, reliable and economical drive.

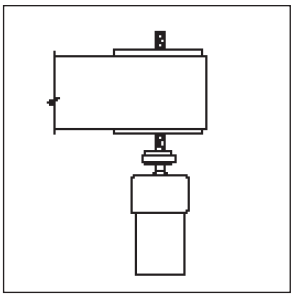

Figure 13.19
Gear motor directly connected by flexible coupling to drive shaft

Figure 13.20: Gear motor combined with chain drive to drive shaft is one of the lowest cost flexible arrangements which is both substantially reliable and capable of providing additional reduction.

Redrawn

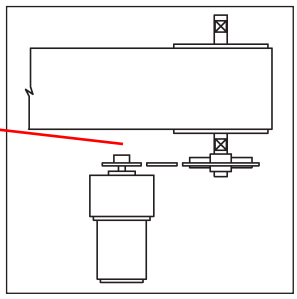

Figure 13.20
Gear motor combined with chain drive to drive shaft

Figure 13.21: Parallel-shaft speed reducer directly coupled to both the motor and the drive shaft is versatile and reliable, and are generally heavier in construction and easier to maintain. It is particularly well suited to large conveyors.

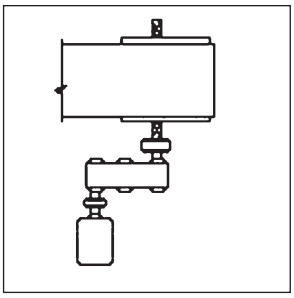

Figure 13.21
Parallel-shaft speed reducer directly coupled to both the motor and the drive shaft

Brakes and Backstops in Combination *Cont.*

BACKSTOP AND BRAKE RECOMMENDATIONS

Table 13.34 lists recommendations for the use of backstops and brakes on horizontal, inclined, and declined conveyors. Brakes are a necessity on declined conveyors so that the loaded belt may be stopped without excessive or runaway coasting. Brakes are also applied to horizontal and inclined belt conveyors for the same reason. Excessive coasting may discharge far more material than the succeeding conveyor or other units can handle. Mathematical calculation and the careful selection of a properly sized brake will eliminate such difficulties.

Table 13.33
Backstop and Brake Recommendations

Type of Conveyor	Backstop	Brake	Forces to be Controlled
Level or Horizontal Conveyor	Not Required	Required when coasting of belt and load is not allowable or needs to be controlled	Decelerating force minus resisting friction forces
Inclined Conveyor	Required if HP of lift equals or exceeds HP of friction	Not usually required unless preferred over backstop	Inline load tension minus resisting friction forces
Declined Conveyor	Not Required	Required	Decelerating force plus incline load tension minus resisting friction

Caution. Brakes and Backstops should never be used as the only method of holding a belt during maintenance or cleaning. If working on the belt or near pinch points make sure the potential energy of the belt and load has been neutralized with belt clamps or other suitable means.

Devices for Acceleration, Deceleration, and Torque Control

STARTING THE CONVEYOR

Smooth starting of a conveyor belt is important. It can be accomplished by the use of torque-control equipment, either mechanical or electrical, or a combination of the two. The belt conveyor designer should investigate acceleration stresses of conveyor components to insure that the overall stresses remain within safe limits. Smooth starting can be an important consideration, where excess horsepower may have been installed to provide for future increased capacity or for future extensions of the conveyor. In cases of conveyors having vertical curves or trippers, too rapid a start may cause excessive lifting of the belt from the idlers. This would necessitate a provision for gradual acceleration of the conveyor belt.

CONTROLLED ACCELERATION

Acceleration can be controlled by several types of electrical devices.

Wound-Rotor Motors with Step Starting

By the addition of external resistance in the secondary winding, electrically accessible through slip rings, starting torque can be controlled by planned steps. This allows a program designed to suit the particular conveyor, and overcome the problems of excessive belt tension, shape of the vertical curves, and other problems that are solved by starting time control. This type of electrical control device has been widely used for many years on large belt conveyor systems.

Squirrel-Cage Induction Motor with Autotransformer

Another method of controlling the torque, and with it the acceleration time, is the use of an induction motor (normal or high-torque) with autotransformer starting. Its use must be checked because the low-starting torque caused by the reduced voltage may not be enough to overcome the breakaway static friction in level or inclined conveyors.

PAGE ADDED TO SHOW SAFETY LABEL PLACEMENT GUIDELINES BH-1 AND BH-2 REFERRED TO ON PAGE 474. These are available for free download from the CEMA Web Site's Safety Page.

Guidelines for Safe Operation and Maintenance *Cont.*

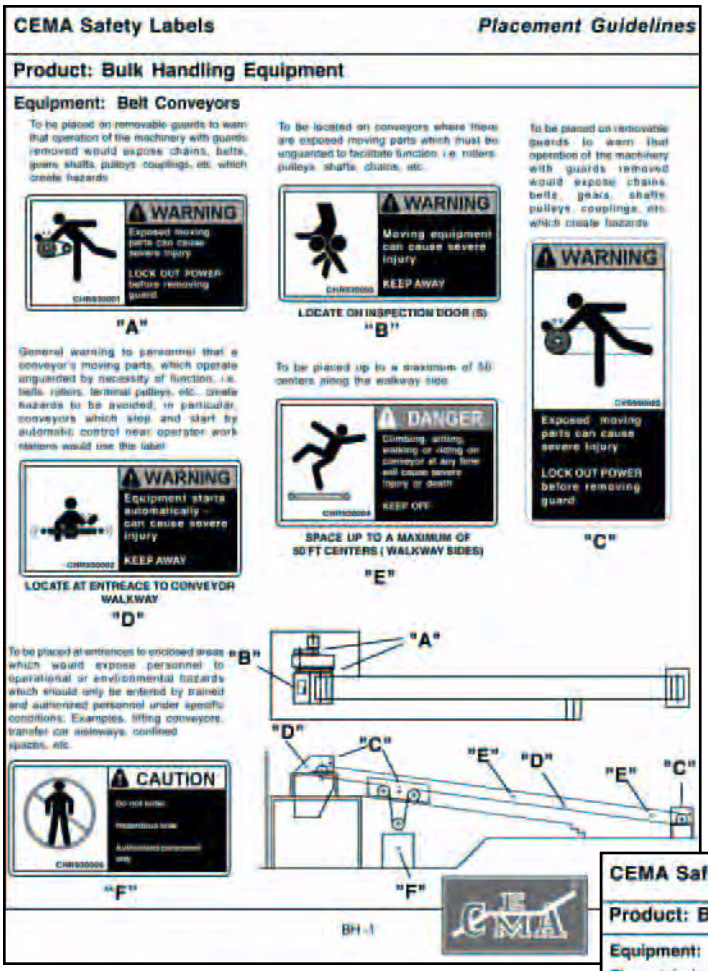

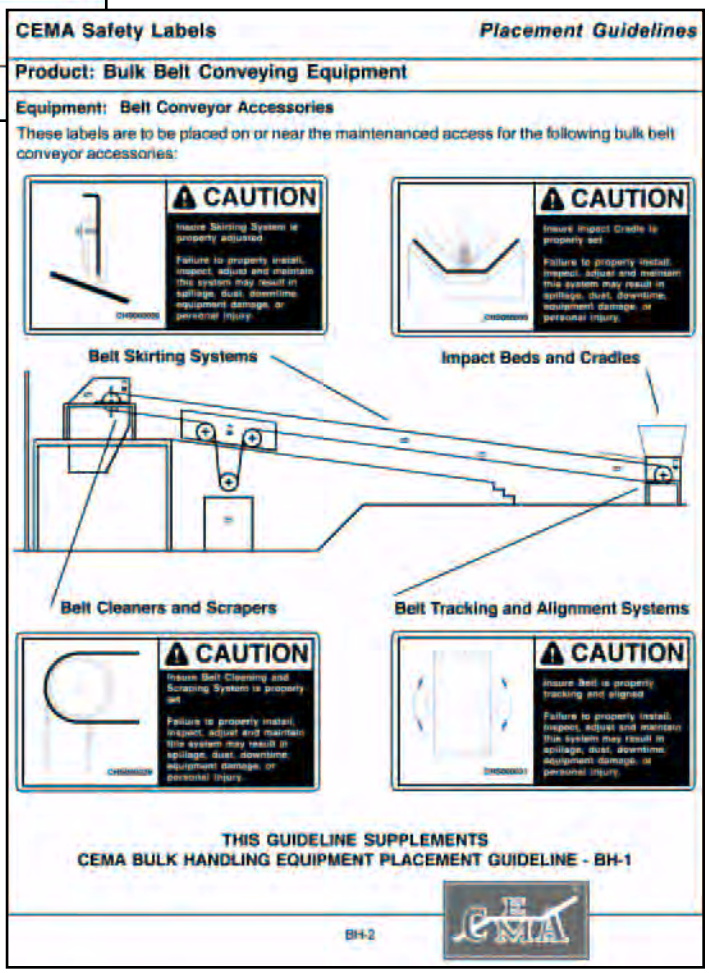

Automatic Takeups *Cont.*

Table 15.2
Recommended Takeup Movement

Type of Takeup and Belt Carcass Material in the Lengthwise Direction	Percent of Rated Tension		
	100%	75%	50% or less
Manual Takeup			
Polyester	2.00%	1.75%	1.50%
Nylon	3.50%	3.00%	2.50%
Fiberglass	1.00%	0.75%	0.50%
Automatic Takeup			
Polyester	1.75%	1.50%	1.25%
Nylon	3.00%	2.50%	2.00%
Fiberglass	1.00%	0.75%	0.50%
Steel Cable	0.40%	0.30%	0.20%

AUTOMATIC TAKEUP LOCATION

Automatic takeups may be located at any place in the return run of the belt conveyor. The prime consideration is where the automatic takeup will work best in relation to the drive, to keep belt tensions at a minimum. Other considerations, such as available space, maintenance conditions, and the economics of the location, should also be taken into account.

Generally, the most inexpensive location for an automatic takeup is at the tail of an inclined conveyor. At this point, no additional pulleys will be involved if the tail pulley is actuated horizontally to act as a takeup. On steeply inclined conveyors, the weight of the takeup pulley assembly and belt may provide sufficient slack-side tension to prevent drive pulley slippage, without the need for additional counter-weight; though belt sag requirements near the loading point should be considered.

On long, horizontal, or slightly inclined conveyors with head drives, the automatic takeup should be located near the drive, where it will act quickly enough to prevent slippage of the belt on the drive pulley during acceleration at startup. If the takeup is located else-where its movement must be calculated to be sure that it exceeds the rate at which the belt will be deposited in the takeup. Refer to Chapter 6, for incorporating the effect of location into the belt tensions.

Various layout and operating issues often govern the takeup design. Vertical space available versus the takeup travel needed will often play a role with the decision on where and what type of takeup to use. Systems utilizing electric cable drum drives with tension sensing devices are often used in applications where vertical space is at a premium. When conveyors are designed to be moved as modules, similar independent, active, horizontal, takeup will be used for simplicity and flexibility.

AUTOMATIC TAKEUP FORCE REQUIREMENTS

An automatic gravity takeup must provide a force on the takeup pulley equal to twice the required belt tension, at the place where the takeup is installed. This force is often supplied by a counterweight composed of steel, cast iron, concrete, or some other heavy material equal to the force required. The force may be somewhat less or greater in magnitude and multiplied appropriately by the mechanical advantage of a system of ropes and sheaves

To calculate the required force of the automatic takeup or the weight force of a gravity takeup, the following formula can be used:

$$W_g = \frac{2T_{tu} + W_f - W_p}{R_1}$$

Equation 15.3
Automatic Take up Force

Automatic Takeups *Cont.*

$$T_{tumax} = \frac{W_{tu}}{2 \cdot n_r} \cdot \frac{\sum_{m_{iP}} \left(\frac{1}{K_{sh}}\right)^{m_{iP}}}{\sum_{m_{oW}} \left(\frac{1}{K_{sh}}\right)^{m_{ow}}} \qquad T_{tumin} = \frac{W_{tu}}{2 \cdot n_r} \cdot \frac{\sum_{m_{oP}} \left(\frac{1}{K_{sh}}\right)^{m_{oP}}}{\sum_{m_{iW}} \left(\frac{1}{K_{sh}}\right)^{m_{iw}}}$$

Note: The notation $\sum$ indicates the sum of a series with integer exponents and indicates m_i, m_{i+1}, m_{i+2} ... with m=0, m=1, m=2 ... and so on.

Where:

K_{sh} = effective friction of rope movement and sheave rotation;
= 1.04 for sheaves with anti friction/rolling element bearings
= 1.09 for sheaves with plain bushings

m_{iP} = $0 \ldots n_{RP} - 1$

m_{iW} = $0 \ldots n_{RW} - 1$

m_{oP} = $n_{sh} + 1 - n_{RP} \ldots n_{sh}$

m_{oW} = $n_{sh} + 1 - n_{RW} \ldots n_{sh}$

n_{RP} = Number of rope parts pulling on takeup carriage.

n_{RW} = Number of rope parts supporting W_{tu}

n_{sh} = Number of rotating sheaves

n_R = Number of independent ropes comprising the rope system

T_{tu} (lbf) = Maximum and Minimum Belt Tension at takeup pulley

W_{tu}(lbf) = Weight or Actuation Force into sheave system.

The notation $\sum$ indicated the sum for a series of indices $i_1 \ldots i_2$. i.e. 1,2,3 with i_1=1 and i_2=3. Both T_{tumax} and T_{tumin} should be calculated and used as a possible range of tensions that may exist at the takeup pulley.

Note the effect that bronze bushed wire rope sheaves can experience significant line frictional losses For example, in the following example, a single rope running through 6 rotating and load bearing sheaves.

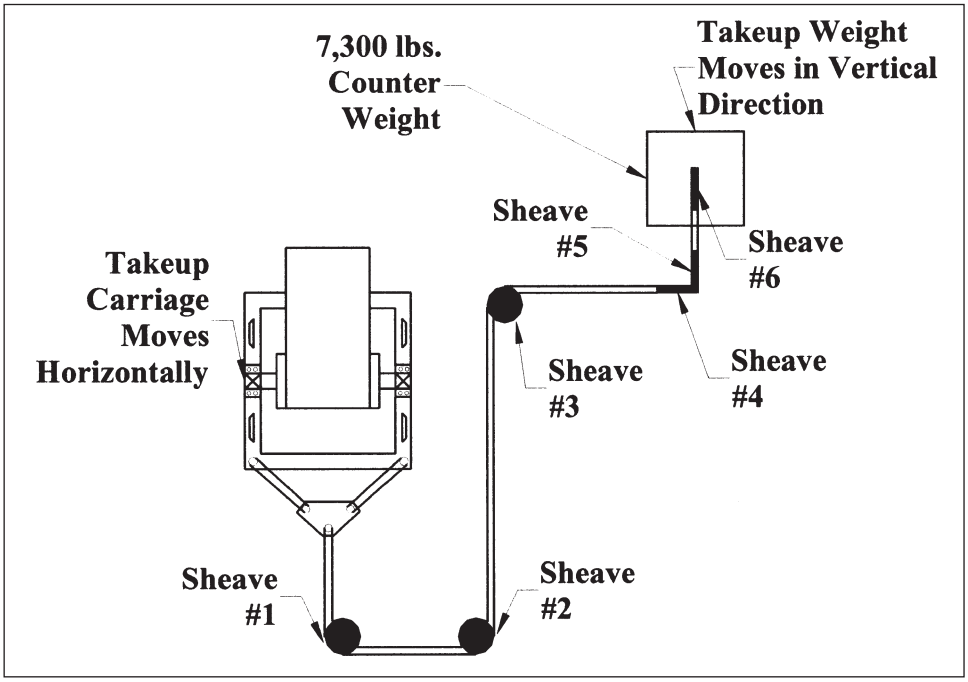

Figure 15.4
Horizontal Gravity Takeup for the Example Calculations

Chapter Six

Chapter 6 Nomenclature

No Changes This Page

Symbol	Description
β	Idler troughing angle (deg)
ΔA_e	Effective total deviation from perpendicular to belt travel (in)
ΔA_{ei}	Expected average installation deviation referenced from center roll to perpendicular to belt travel (in)
ΔA_{et}	Effective misalignment due to intentional inclination of idler frame δ_{it}, Equation 6.32 (in)
θi_n	Uniform or average angle of incline (+) or decline (-) in direction of movement over the flight length L_n (deg)
δ_{it}	Intentional inclination of idler frame or wing roll to aid in belt tracking (in/in)
θ_n	Belt wrap on pulley n per Figure 6.59 (radians)
φ_s	Material surcharge angle (deg)
ΔT	Positive (+)ΔT increases tension and negative (-) ΔT reduces tension in the direction of belt motion (lbf)
ΔT_a	Tension available to cause speed change (lbf)
ΔT_{bin}	Tension increase from visco-elastic deformation of belt (lbf)
ΔT_{ef}	ΔT_{ef} required at the new speed (lbf)
ΔT_{ei}	Initial ΔT_e before the speed change (lbf)
$\Delta T_{Energy\ n}$	Resistances due to potential and kinetic energy = $\Delta T_{Hn} + \Delta T_{amn}$ (lbf)
ΔT_{et}	Temporary or transient active tension provided by the drive (lbf)
ΔT_{gmn}	Tension loss in flight n from self misalignment of garland idler (lbf)
ΔT_{Hn}	Change in belt tension to lift or lower the material and belt (lbf)
ΔT_{imn}	Tension loss from idler misalignment (lbf)
ΔT_{isn}	Change in tension from idler seal friction (lbf)
ΔT_{iWn}	Change in tension from idler load friction (lbf)
$\Delta T_{Main\ n}$	Main resistances = $\Delta T_{ssn} + \Delta T_{isn} + \Delta T_{iWn} + \Delta T_{bin} + \Delta T_{mn} + \Delta T_{sbn} + \Delta T_{sn} + \Delta T_{mzn}$ for flight n (lbf)
ΔT_{mzn}	Tension change due to bulk materials moving between the idlers (lbf)
ΔT_n	Tension change in flight or pulley n (lbf)
ΔT_n	Total change in belt tension to cause steady belt speed (lbf)
ΔT_{ni}	Total tension loss from 'main resistances' in flight 'n' per idler (lbf)
$\Delta T_{Point\ n}$	Point resistances= $\Delta T_{pxn} + \Delta T_{prn}$ + Tbcn (lbf)
ΔT_{prn}	Tension change due to pulley bearings (lbf)
ΔT_{pxn}	Tension change due to belt bending on the pulley (lbf)
ΔT_{sbn}	Drag due to slider beds (lbf)
ΔT_{sn}	Tension change due to bulk materials sliding on skirtboards (lbf)
ΔT_{ssn}	Tension change due to the belt sliding on skirtboard seal (lbf)
ΔV	Change in belt speed (ft/min)
ΔV_t	Change in belt velocity during time interval t (fpm)
Δy_{sn}	Average catenary belt sag for flight n as a percentage of the idler spacing (%)
ΔY_{sn}	Vertical drop between idlers for flight n (ft)
μ_{bcm}	Sliding friction factor between belt and the cleaner blade (dimensionless)
μ_{ss}	Sliding friction coefficient between belt and seal rubber (dimensionless)
a	Acceleration (ft/sec2)
A_{em}	Effective misalignment due to manufacturing variation (in)
a_n	Constant coefficient used in rubber characterization equations per 6.28 (dimensionless)
A_s	Distance between idler support points in the direction of belt width. Refer to CEMA Standard 502, most current edition. (in)
b	Belt related friction losses subscript
B	Wing roll length (in)
b_n	Constant coefficient used in rubber characterization equations per 6.28 (dimensionless)
BW	Belt width (in)
C	Friction variables for sliding friction between components (dimensionless)
c1,	Function in Equation 6.48 (dimensionless)
c_{1in}	Function in Equation 6.48 (dimensionless)
C_{bcm}	Frictional resistance from belt movement under cleaner pressure (lbf/in)
C_{bi}	Friction factor for sliding between belt cover and idler material (dimensionless)

Chapter Six

Chapter 6 Nomenclature

Symbol	Description
C_{im}	Design factor for frictional resistance due to idler misalignment (dimensionless)
C_{iW}	Idler rotating resistance load factor Table 6.21 (dimensionless)
C_{mg}	Design frictional resistance from garland idler self alignment (dimensionless)
C_s	Skirtboard Friction Factor (dimensionless)
C_{sb}	Slider Bed Sliding Friction Factor, Table 6.36. (dimensionless)
C_{ss}	Frictional resistance to the belt movement (lbf/ft)
C_w	Pulley wrap factor (dimensionless)
D_f	Flywheel diameter (ft)
d_{ms}	Depth of material sliding on the skirtboard per Figure 6.39 (in)
D_n	Pulley diameter (in)
D_r	Roll diameter (in)
e	Base of naperian logarithms = 2.718
E_o	Rubber stiffness property Table 6.28 (psi)
E_b	Longitudinal belt modulus (lbf/in)
e_{im}	Average misalignment of idler axis to belt longitudinal axis (in/in)
E_t	Belt modulus (lbf/in)
E_n	Efficiency or power loss between drive and belt (dimensionless)
F	External loads affecting ΔT_n, units as needed
f	Coefficient of friction between pulley surface and belt surface (dimensionless)
F_{bcm}	Effective normal force between belt and cleaner (lb/in)
f_e	Transport efficiency effective friction factor calculated by the change in belt tension per unit length divided by the combined weight of bulk material, belt and idler roll per unit length (dimensionless)
F_{ss}	Effective normal force between belt and seal (lbf)
g	Acceleration of gravity = 32.2 (ft/sec^2)
h_b	Belt cover thickness (in)
H_n	Vertical lift (y direction) of flight n (ft)
i	Idler related friction losses subscripts
i	Index for each individual rotating component including drive components (n for pulleys)
K	Friction variables for internal energy loss (dimensionless)
K_{biR}	Viscoelastic characteristic of belt cover rubber Equation 6.29 (dimensionless)
K_f	Radius of gyration of a flat round plate (ft)
K_{is}	Seal torsional resistance per roll at 500 rpm Table 6.19 (in x lbf)
K_{iT}	Temperature correction factor per Equation 6.18 (dimensionless)
K_{iV}	Torsional speed effect Table 6.19 (in x lbf/rpm)
K_t	Temperature correction factor (dimensionless)
K_x	Idler resistance factor (dimensionless)
K_y	Belt Resistance Factor (dimensionless)
L	Total conveyor path length, tail to head (ft)
L_d	Drift distance (ft)
L_m	Total loaded length of the belt, varies between 0 and total conveyor length L (ft)
L_n	Length of a particular conveyor segment or flight n (ft)
m	Bulk material friction related losses subscripts
m	Number of belt cleaners in flight n (dimensionless)
m	Factor in the calculation of S_{ic} with a value of 1 or 2 (dimensionless)
M_d	Material discharged during stopping (tons)
n	The subscript n refers to one in a series of flights and pulleys making up an entire conveyor, typically referenced from the tail pulley progressing in the direction of belt movement
n	Tension subscripts, relate to particular drive or brake pulleys (Subscripts of n = 1, 2.. separated by commas for multiple drives i.e. $T_{1,1}$ etc)
n_r	Number of rolls per idler set (dimensionless)
P_{bn}	Linear power seen by the belt at pulley n (hp)
P_{dn}	Minimum rotary power required of a drive component to pulley n (hp)
P_{jn}	Cover indentation parameter (dimensionless)

Chapter Six

Chapter 6 Nomenclature

	Symbol	Description
	Q	Bulk material loading rate in weight or force units (ton/hour or tph)
	R	Speed reduction ratio (dimensionless)
	R_{mz}	Correction between actual sag and catenary sag (dimensionless) Equation 6.44
	R_{pn}	Resultant radial load (vector sum of belt tensions and pulley weight) of pulley n (lbf)
New	R_{rbi}	Low limit multiplier for possible lower belt rubber indentation resistance
New	R_{rim}	Low limit multiplier for possible lower idler misalignment drag
	R_{rp}	Pulley drag, can vary up to R_{rp}= 0.67 (dimensionless)
New	R_{rmz}	Multiplier for possible lower material trampling loss due to belt sag
New	R_{rsb}	Low limit multiplier for possible lower slider bed friction
New	R_{rsk}	Low limit multiplier for possible lower skirtboard drag
	R_{rss}	Low limit multiplier for skirt seal drag (dimensionless)
	R_{rxx}	Low limit multiplier form where xx refers to various Main Resistances (dimensionless)
New	R_{ris}	Multiplier used to obtain the low end of the expected range for seal torsion resistance
	R_{riV}	Multiplier used to obtain the low end of the expected range for torsion speed effect
	R_{riW}	Multiplier used to obtain the low end of the expected range for idler load friction
	SF_d	Safety Margin for active pulley (dimensionless)
	S_{ic}	Critical idler spacing for belt flap (ft)
	S_{in}	Spacing of idler sets along flight n (ft)
	T	Assumed to be, T_x, tension in the direction of belt travel (lbf)
	t	Time interval being analyzed (sec)
	T_1	Tension on the carry side of the primary drive pulley (lbf)
	$T_{1,n}$	Tension in the belt approaching active pulley n (lbf)
	T_2	Tension on the return side of the primary drive pulley (lbf)
	$T_{2,n}$	Tension on the belt retreating from active pulley n (lbf)
	T_{ac}	5th edition additional tension contributions from accessories (lb/ft)
	T_{am}	5th edition tension resulting from the force to accelerate the material as it is fed onto the belt (lbf)
	t_b	Conveyor belt thickness (in)
	T_e	For drive pulleys T_e is used interchangeably with ΔT (lbf)
	T_{en}	Tension change at an active pulley $=T_{1n}-T_{2n}$ (lbf)
	T_F	Ambient operating temperature (°F)
	TIR	Roll or Pulley diametral run out (in)
	T_{mn}	Minimum tension in flight 'n' (lbf)
	T_n	Average tension in flight or pulley n (lbf)
	T_p	Tension due to the belt flexure around pulleys and pulley bearing resistance (lbf)
	T_p	5th addition additional tension contributions (lb/ft)
	T_{qn}	The active torque provided to the pulley (ft-lbf)
	T_{tu}	Tension at takeup (lbf)
	T_x	Assumed to be, T, tension in the direction of belt travel (lbf)
	V	Belt speed (ft/min or fpm)
	V_c	The critical maximum belt speed without causing material lift off (ft/min)
	V_o	Initial velocity of material at point of impact with belt (fpm)
	V_t	Transient belt velocity after time t (fpm)
	V_w	Wave front velocity (ft/min)
	W	Distributed external vertical loads (lbf/ft)
	W_b	Distributed gravity load of belt along length of belt (lbf/ft)
	W_{bt}	Total weight of the belt = W_b*L_b (lbf)
	W_f	Weight of flywheel (lbf)
	W_{fe}	Effective translating weight of flywheel (lbf)
	w_i	Load distribution factor Table 6.26 (dimensionless)
	W_i	Swinging weight of idler (lbf)
	W_i	Weight of rotating component i (lbf)
	W_m	Distributed gravity load of bulk material along length of the belt (lbf/ft)
	W_{mt}	Total weight of the bulk material on the belt = W_m*L_m (lbf)

Chapter Six

Chapter 6 Nomenclature

Symbol	Description
$_x$	Direction subscript + in direction of belt travel
$_x$	Subscript in ΔT_{pxn} 'f' for fabric carcass belt 's' for steel cable belt construction
$_y$	Direction subscript in the belt width direction referenced from o at belt centerline
$_z$	Direction subscript in the belt thickness direction referenced from carrying side
γ_m	Density of the bulk material (lbf/ft^3)
γ_m	Specific weight of bulk material (lbf/ft^3)
ΔT_{amn}	Tension added in loading to continuously accelerate material to belt speed (lbf)
ΔT_{amn}	Tension added in loading flight n to continuously accelerate material to belt speed (lbf)
ΔT_{bcn}	Tension added due to belt cleaners and plows (lbf)
ΔT_{dpn}	Tension added due to discharge plow (lbf)
θ_i	Angle of impact of material to the belt relative to belt direction (deg)

Chapter Seven

Chapter 7 Nomenclature

Symbol	Description
Δ	Angle in degrees that chute slope makes with the horizontal (deg)
A	Protective covering for cords during the entire belt life A = 2F + D (in)
B	Amount of top cover used for the service life of the belt (in)
C	Amount of bottom cover used for the service life of the belt (in)
D	Diameter of the cord (in)
E	Rubber encapsulating the steel cords (in)
F	Thickness of rubber to protect the cords during service (in)
F_f	Frequency factor (min)
H_e	Equivalent free fall (ft)
H_f	Total free fall (ft)
H_r	Vertical height on loading chute slope (ft)
I	RMA rubber grade
II	RMA rubber grade
L	Center-to-center length of the belt conveyor (ft)
Pf	Pulley face width (in)
PIW	Belt working strength (lbf/in-width)
V	Belt speed, fpm